UNCLE KLUNK

CREATIVE ENGINEERING

INCORPORATED

HOME OF ELECTRONIMATION™

47 West Jefferson Street
Orlando, Florida 32801
(305) 425-1001

333 West Michigan Avenue
Orlando, Florida 32806
(305) 422-4061

Reply To:

November 15, 1983

TO: ENTERTAINMENT CENTER MANAGERS AND TECHNICIANS

This manual, when used in conjunction with the instructional video tape, will provide you with all the information needed to install Uncle Klunk and convert him into Santa Claus. In addition, you will find a section dedicated to Klunk's critical angle adjustments. Please view the video tape and read this manual before attempting the installion.

In order to provide suitable bindings for this manual, PLEASE ADD THESE PAGES TO THE ORIGNIAL UNCLE KLUNK PARTS CATALOG THREE RING BINDER.

Since Klunk will be immediately converted into Santa for the Christmas season, the installation of the following items may be deferrred until the time Uncle Klunk abomination will be reinstalled:

A) GUEST CHAIR AND BASE
B) T.V. CAMERA
C) BANANA, FRUIT BOWL AND BANANA STAND
D) PEE WEE SPOTLIGHT AND PLUG BASE
E) MOM'S PICTURE
F) COO COO CLOCK AND RELATED HARDWARE
G) "ON THE AIR" SIGN
H) KLUNK'S MASK, EARS AND COSTUME
I) FLOWER VASE

If you have any questions or comments please call:

Tim Inglis
Creative Engineering, Inc.
305/425-1001

Sincerely,

Tim Inglis
Animated Entertainment Coordinator

CREATIVE ENGINEERING

INCORPORATED

HOME OF ELECTRONIMATION™

47 West Jefferson Street
Orlando, Florida 32801
(305) 425-1001

333 West Michigan Avenue
Orlando, Florida 32806
(305) 422-4061

Reply To:

November 1983

Entertainment Center Managers
ShowBiz Pizza Place

Your restaurant has been selected to receive the new Uncle Klunk-Santa Claus character. Enclosed you will find instructional material and the necessary hardware needed to prepare your stage for the new character. Also you will find Audio tapes that will enable you to run your show during the Klunk/Santa installation.

Soon you will also receive via common carrier, carpet which you will need in order to redress your stage right. The installation will be done in two segments. First "the pre-installation" which will prepare your stage right for the the new character. Next, the main character package will be delivered at a predesignated time, and the installation will commence.

DO NOT prepare your stage until notified by CIM ROESENER. The stage preparation and character delivery will be coordinated by Cim Roesener and myself to insure a minimal amount of confusion and difficulty.

If you have any questions or comments please call Cim Roesner at (214) 258-8507.

Sincerely,

Creative Engineering, Inc.

Tim Inglis
Animated Entertainment Coordinator

TI/lmf

Table of Contents

I. Pre-installation

II. Uncle Klunk Installation
Santa Claus Conversion

III. Lists and Drawings

IV. Critical Adjustments

Please use the chart below for your Uncle Klunk Adjustment Tape counter positions.

Approximate counter number	Program Name
000-072	Warm up
073-165	Set Phone
166-228	Set Banana
229-595	Video Test
596-653	Skit

July 14, 1983

PRE-INSTALLATION SHIPMENT PACKAGE

I. Inventory all items including hardware.

1. Klunk Video Installation tape.
2. Show tape that uses only center stage and stage left.
3. Birthday tape that uses only center stage and stage left.
4. Carpet for Uncle Klunk (pre-cutout for character placement.)
5. Hardware package for entire stage right installation.
6. Uncle Klunk Installation Manual.

NOTE: Call Creative Engineering, Inc. immediately if missing any or part of any items, Fred Quinlan (305) 841-7900.

II. View Klunk Video Installation Tape, and read through the Installation Manual. Take down any notes where you foresee any problems with your stage right installation of Uncle Klunk.

You are now ready for the Pre-Installation of Uncle Klunk.

PRE-INSTALLATION

1. Remove the crash cymbal from the stage. Fold up the cymbal stand. Using masking tape, tape the hardware to the cymbal stand, and box for storage.

2. Remove Rolfe and Earls costume, mask, hands, feet, body fur, and drumstick. Then box for storage.

3. Air down the show.

4. Disconnect the main air line to Rolfe's valve bank at the oiler by splitting the hose if necessary.

5. Unbolt the quick disconnect on Rolfe's valve bank using two 7/16" wrenches. Be sure not to dislodge the "O" rings on the quick disconnect.

NOTE: Save all nuts, bolts, flat washers, and lock washers.

6. Disconnect Rolfe's character cable. This cable will not be used for Uncle Klunk, but it should remain under the stage. Using masking tape, tape the end of the cable and wire tie the cable up off the floor.

7. Remove Rolfe's valve bank from under the stage through the trap door.

8. By crawling under the stage, carefully pass Rolfe's plumbing harness up and out of the stage through the hole behind Rolfe's foot. You will have to fold the quick disconnect parallel to the air lines to get it through the hole.

9. While still under stage, unbolt Rolfe's foot plates.

NOTE: Very Important- Make sure someone is holding Rolfe and Earl securely so that he won't take a dive into your dining room. Save all nuts, bolts, and washers.

10. Carry Rolfe and Earl carefully off the stage and into your Tech room. Secure him safely against a wall for the time being. After Uncle Klunk is installed, there will be a dolly with pre-drilled holes and tee-nuts to bolt Rolfe and Earl onto. This makes for Rolfe to be secure enough so you can use his time off to make any repairs on him. Hook up his valve bank using the same hardware. Make sure the purple air lines line up on both quick disconnects.

11. Remove rainbow from L-brackets, remove L-brackets from stage. Tape hardware to brackets cover with paper for protection.

12. Remove the floodlights from behind the rainbow, two red, and two yellow. Using masking tape, tape all hardware to the light fixtures and box for storage.

13. Vacuum carpet- Remove all staples, nails, etc. from carpet. Pull up carpet slowly and carefully. This carpet will be used when Rolfe goes back on stage. Roll it up and prepare to store it. Remove any protruding objects from the stage floor. This will insure a flat clean surface for new carpet.

14. Take an inventory of all props removed from stage before parking. After inventory these items are ready for storage:

1. Crash cymbal with hardware.
2. Costumes, mask, feet, hands, body fur, and drumstick.

3. Rolfe's mounting hardware.

4. Floodlights, two yellow, and two red with hardware.

5. Rainbow with L-brackets and hardware.

6. Carpet.

15. Vacuum under stage and sweep off stage. Close trap door.

16. Finding back wall center line (See Drawing 1A):

Measure entire back wall from break of wall by stage right drape motor to break of wall by center stage drape motor. Divide total measurement in half and that is your back wall center line, mark it.

17. Unroll the new carpet and save the lumber rolled inside. Lay the carpet on Rolfe's stage. The carpet has cut outs and is marked for character placement. Align the carpet center line with the back wall center line. The carpet must be flush against the entire back wall.

It may be necessary to relocate the trap door. Check the layout of the trap door in relation to Klunk, his right foot, the table and the guest chair. If any of these placement marks interfere with the opening and closing of the trap door you will have to relocate it. If so, roll up carpet and remove. Relocate the door so it will not interfere with Rolfe when he is back on stage. See drawings 2A and 3A. When relocating the trap door, be sure to secure the old door with nails and good support (2 x 4's.) Make sure to move the oiler to the new area.

18. Stapel, do not glue the carpet. Staple along the back wall. Do

not staple the whole stage at this point. Pull the carpet tight out towards the dining room. With a razor knife, carefully cut out the radius of the stage, around the drape motors and in between stage right and center stage. Also, cut out for new trap door. Secure the carpet to the stage with staples as you cut.

19. Use vice grips to shut off the air by crimping the air line just before the oiler.

20. Install the Show tape and Birthday tape that only uses stage left and center stage. Using ShowBiz Tape Installation Procedure.

Your Pre-Installation of Uncle Klunk is now finished.

UNCLE KLUNK INSTALLATION INSTRUCTIONS

I. Disassemble Crates and Unpackage All Boxes (See Drawing 4A & 5A)

A) Retain the crates in storage because they will be used again when Klunk is removed at a later date. Save all hardware and pay attention to the disassembly in order to make it easier for reassembly later. Both crates are pre-marked at corners. Crate in (Drawing 4A) can be used to store Rolfe after bolting him down to Klunk's dolley.

B) Unpackage boxes- be sure to retrieve all items from the packaging.

II. Inventory

A) Use packing list enclosed.

B) Call Creative Engineering, Inc. immediately if missing any or part of any items.

C) Check for any shipping damage.

Missing or damaged parts should be immediately reported to:

Fred Quinlan
Creative Engineeering, Inc.
(305) 841-7900

III. Install Ceiling Accessories

A) Install Banner Board

1. Remove the Rolfe and Earl valance and store it with all other of Rolfe's props.

2. Assemble the Banner Mount Board using (3) 1" bolts (hardware #5.) (Refer to Drawing 6A.)

3. Position the mount board with long point pressed flat against the right hand apron. Mount the assembled Banner Board to suspended ceiling T-grid with 1 3/4" derydynes, (hardware #3.) Attach with the derdynes spaces evenly along the entire length of the board.

4. Depending on the particular theater construction and dimensions of the wall and ceiling, it may be necessary to add an extension piece of 1" x 2" to the end of the Banner Board to the wall.

B) Install Abomination Mechanism and Sign

The Abomination Sign mounts 6" behind the banner and is centered on the center line of the stage right radius. To get the center line of stage, (See Drawing 1A.) Remove the ceiling tile around the front of the platform and any additional tile necessary to provide ample work area above the ceiling for the whole assembly.

C) Install Support Frame (See Drawing 8A)

1. In the ceiling, attach a 2" x 4" x 12" support piece to drapery board directly above center line using 3" dry wall screws, (hardware #4.) It should be secured about 5" back from the front of the drapery board.

2. Using the 3" dry wall screws attach a 2nd 2" x 4" support piece on top of the first one.

3. Attach a 2" x 4" support piece on the back wall above the ceiling tiles. Attach this back support piece at the same height as top front support. Use 3" dry wall screws to mount support piece into a stud on the back wall.

4. Attach the 2" x 4" x 8' to the support pieces using 3" dry wall screws. The 2" x 4" x 8' should be on radius center line. The mechanism mounts on the 2" x 4" x 8', this support frame must be sturdy and secured.

D) Install Mechanism

1. Put the Mechanism up in the ceiling on top of the 2" x 4" x 8'. Allow

the cables from the Mechanism to hang down. Position the Mechanism so that the cables hang 6" behind the Banner, measured from the front of the Banner Board.

2. After the Mechanism is on center line and the lines are in position evenly, bolt down the Mechanism to the 2" x 4" x 8', (hardware #6.)

3. Hook up air line (A) to the front of Mechanism, and line (B) to the back. Run the air lines across the ceiling to the wall at stage right curtain motor. Run the air lines down the wall between the rain curtain and the curtain motor. Fasten with, (hardware #13) to secure lines. Run the lines down under the stage. Paint air lines with flat black paint.

E) Install Uncle Klunk Banner

Install the banner, centering it onto the Banner Board. Use the velcro to stick into place, add a few staples for security.

F) Install Abomination Sign (See Drawing 8B)

1. Using the formula given to calculate cable lengths, cut and crimp sign cable and safety cables to length. Be sure to make the cables equal lengths so the sign will hang level.

2. Have an assistant hold the sign from the front, and attach the safety cables to the sign through the springs. The sign should now be hanging down from the safety cables.

3. Attach the sign cables to the springs as indicated in the drawing. Make sure all connections are secure.

4. Re-install the ceiling tiles around the sign Mechanism and cables. You will have to cut clearance holes (approx. 5" in diameter) around the area which the cables will pass through the ceiling tiles.

IV. Install T.V. Camera (See Drawing 7A)

Install the T.V. camera over the guest chair position, approx. 34" on

center from the back wall. Attach (2) ¼" – 20" x 3" eyebolts, (hardware #8) in the ceiling 25½" apart. Hang the rear of the camera 17" down from the ceiling, and the front 23" from the top. Use picture hanging wire to hang the camera from the ceiling, (hardware #10.)

V. Install Props

A. Install "On The Air" Sign

The sign should be centered and mounted evenly with the top of the curtain header. If the Applause Sign face plate has not been changed over to the "On The Air" face plate, then find the retrofit instruction, (Drawing 9A.) Slide in the new "On The Air" sign.

B. Install Coo Coo Clock

1. Mount the L-brackets to the wall using (6) 3" toggle bolts, (hardware #7.) Be sure to mount the shorter leg of the bracket to the wall. Mount the brackets 52" above the stage floor to the top of the bracket. Place the brackets on the wall 15" apart, centering them on the back wall center line. Be sure the brackets are level and secure to the wall.

2. Pull the a.c. cord and air lines out the rear door of clock.

3. Reset the clock on the brackets, center the peak of the clock with the back wall center line. Set the clock 1½" out away from the wall to clear the rain curtain. Secure the clock down to the brackets using the 3/4" derdynes, (hardware # 2 .)

4. Run the air lines and power cord straight down the rear of the backwall and fasten with wire ties, (hardware #13.)

5. Drill a hole through the stage and run the Coo Coo Clock air lines down under the stage.

6. Plug the power cord into SE/1, previously the red flood light.

7. Use flat black spray paint to disguise the power cord and air lines up against the wall.

C) Install "Love Mom" Picture

Mount the "Love Mom" picture on the back wall 41½" from the center line to the left of the clock, 18½" down from the top of the rain curtain header. Use a 3" dry wall screw in the wall at the top where the picture will hang. Take 2 dry wall screws, and screw them into the picture frame at the bottom of the picture, and allow approx. 1½" space behind the back of the picture at the top and bottom to clear the rain curtain.

D) Install Coo Coo Clock Spotlight (See Drawing 10A)

Mount the pee wee spotlight on the drapery board with 1 3/4" derdynes, (hardware #3.) The spotlight should be close to center line. Remove (2) green overhead flood lights. Screw the plug base directly into flood light fixture nearest spotlight. Plug the a.c. power cord into the plug base.

VI. Install Klunk, Table, and Chair

1. Using (2) 7/16" wrenches take apart Klunks quick disconnect on his valve bank, save nuts, bolts, etc. Using masking tape, tape up both open ends to keep debris out. Be careful not to dislodge the "O" rings.

2. Unbolt Klunk from dolley and place him on stage. The dolley is now to be used for Rolfe storage.

3. Using the carpet cut outs as a template move Klunk to his correct location on the stage.

4. Using ¼" drill bit, drill pilot holes into stage. Make note where you drill into a joist and not through the stage. Here you will use 3/8" x 2" lag bolts, (hardware #11.)

5. Drill out all other holes with a 3/8" bit. Here use, (hardware #1) 3/8" x 2" bolts.

6. Bolt down Klunk, make sure he sits level on the platform.

notches where the key would be inserted. They may also be distinguished by the red wire which should be at the left of the cable as you attach it.

2. The 60 ft. RCA phono cable plugs into the phono jack connector on the computerized tape reader board inside the controller. Run the phono cable back through the wall to the control room. Leave excess cable under the stage.

3. Turn controller power switch off. Plug in extension cord to controller and run it up through the stage at the back wall where the Coo Coo Clock air lines run down. Plug into convenience outlet on back wall. Paint extension cord flat black.

VIII. Control Room Hook Up and Power Up

1. In the control room, plug the "Y" phono connector into #3 output on the top deck. Plug the 60 ft. RCA phono cable from the computerized tape reader board into one female jack of the "Y" connector. Plug the existing phono cable into the other.

2. Turn on the power switch of the Klunk controller, located on the upper right hand side of the cabinet, check the two recessed L.E.D.'s in the upper right hand corner of the front of the box; they should be on now. The upper L.E.D indicates the 5v power supply and the lower one shows the 24v supply voltage.

IX. Character Movement Check

A. Locate the video test equipment at a point where the video display and Uncle Klunk can be viewed simultaneously.

1. Connect the 8 ft. RCA phono cable, provided for "Uncle Klunk VCR", from the audio output #2 on the video tape deck, to the jack on the computerized tape reader board inside the Klunk controller.

2. Power up the video tape deck.

3. Load the adjustment tape and rewind it completely.

B. Run the "warm up" section of the tape. Klunk will go through each movement separately.

1. Check Uncle Klunk and props for air leaks or any obvious defects or damage.

2. Repair any leaks or defects you may find at this time.

X. Dress Character and Stage

1. Locate and install decorative bases for the table and chairs.

2. Set the flower vase on the Coo Coo Clock pedestal.

3. Layout Klunks clothes on the stage.

4. Dress Klunk completely. Make sure all of his snaps and fasteners are in place correctly, and all of his movements are not hindered by clothing friction.

XI. Uncle Klunk/Set Phone

1. Run the next section of the video adjustment tape "set phone".

2. The set phone section will start its cycle by first leaning Klunk's chair back, then moving his arm into position. After his arm is in position, Klunk's wrist and thumb will cycle 5 times and then repeat the whole cycle over. This cycle will repeat until the set phone section of tape is over. If more time is needed, rewind to the beginning of the set phone section and repeat the cycle.

3. Position the phone stand so Klunk's thumb is centered between the "V" blocks. The next adjustment to be made is stand height. Make sure the phone fits squarely into the palm of Klunk's hand when it is in the down position. When you have Klunk picking up and setting down the phone correctly, tighten the adjustments on the phone stand and secure it to the table using 3/4" derdynes.

4. To avoid damage to klunk's arm and hand, only stop the video tape when Klunk is leaning forward and his arm is away from the table.

5. Remove the "V" blocks from the phone stand. Install the phone cover over the stand. Bolt the "V" blocks on to the phone stand.

XII. Uncle Klunk/Set Banana

1. Run the next section of the video adjustment tape "set banana".

2. Use the same procedure for setting up the banana as you did the phone.

3. Slide vase over stand after the stand has been secured to the table.

*Note: Remember to stop video tape only when Klunk is in static position during the cycle.

XIII. Video Test Uncle Klunk and Props

1. Run the "video test" section of the adjustment tape.

2. View the tape long enough to correctly determine that the movement is truly out of adjustment. The video display and character must be synchronized exactly.

3. If a movement is in question:

   a. Isolate the valve in the valve bank that operates the movement in question. Manually operate the valve by pressing the white manual override button on the valve solenoid.

   b. Observe the movement by operating it manually. Look for a smooth operation of the movement in question. Check for cosmetic parts that are binding. If the movement is truly out of adjustment then proceed with the flow control adjustments.

*Remember the air coming out of the cylinder is what you are adjusting.

Santa Conversion of Uncle Klunk

I. Disassemble and remove the following items

A. Guest chair and base
B. T.V. Camera
C. Banana, fruit bowl, and banana stand.
D. Pee Wee spotlight and plug base
E. Mom's Picture
F. Coo Coo Clock, Air Lines, A.C. plug and brackets
G. "On the air sign"
F. Klunk's mask, ears and costume
H. Flower vase

Note: put all these items in individual boxes and place them in storage. Remember to save all the hardware.

II. Remove Klunk's mouth lever and replace it with the Santa mouth lever, see drawing 23A.

III. Remove Klunk's ear plates, see drawing 23A.

IV. Install the Backdrop

A. Staple the Backdrop to the Rain Curtain header board, across the top of the backwall.
B. Stretch the material down over the Rain Curtain to the floor.
C. Roll up the excess material, stretching it tight and staple the roll to the floor.

V. Decorate the backwall

A. Assemble the fireplace.
   1. Unfold the cardboard fireplace and fold the two center pieces toward the inside.
   2. Insert the tabs on the center pieces into the slots and secure them into place.
   3. Insert the tabs on the top of the fireplace into the slots of the Mantel.
B. Position the fireplace behind the table. Be sure that the character does not interfere with the fireplace, then staple it securely to the wall.
C. Using 3" drywall screws, hang the window over the character's rights shoulder. Mount the window about three feet off of the ground, in same fashion as you mounted Mom's picture in the Uncle Klunk installation.
D. Hang Mrs. Claus' picture centering it above the fireplace.
E. Hang Holly around Mrs. Claus picture using pins.
F. Hang the wreath, from the Rolfe Christmas package, above Mrs. Claus picture. Use a 3" drywall screw to attach it to the header board.
G. Hang the garland in a tiered effect over Mrs. Claus picture and out to the sides of the stage. Hang Poinsettia Points at each tiered loop, use pins provided.

VI. Hang the ornaments from the ceiling grids. Use about six snow flakes and three foil ones from the Christmas package.

VII. Hang the six stockings on the mantel. The stockings should be stuffed first. Some small items should be wrapped and put in the top of each stocking. Wrapping paper is provided.

VIII. Place a Poinsettia planter on the left side of the Mantel. This planter was originally on the Rolfe stage. Place the manger on the right side of the mantel.

IX. Place the fake fire into it's position in the middle of the fireplace.

X. Return the green overhead floodlights from Rolfe's stage. Aim them 45 degrees towards the center of the stage.

XI. Assemble and decorate the Christmas tree

A. Assemble the tree with the instructions provided in the carton. Bend the branches to make the tree look full and symmetrical.
B. Place the tree on the stage to the right of the table, in a position where it will not interfere with the opening and closing of the curtains.
C. Install the two sets of lights on the tree. Start at the bottom and string them only on the front of the tree. Plug them into the applause sign circuit or SE3.
D. Decorate the tree using the: satin balls, angels, snowflakes, candy canes, tinsel, and tree top ornament. Hang some tinsel upon the holly on the backwall.

XII. Placing the gifts under the tree

A. Wrap the skirt around the base of the tree.
B. You will be provided with three rolls of wrapping paper and a number of boxes to wrap. These boxes should be wrapped by someone with a talent for wrapping presents. Try and round up some other boxes of various sizes and wrap them as well.
C. Arrange the gifts around the Christmas Tree as you would your own.

XIII. Dress out Santa

A. Secure both boots on his feet.
B. Snap the foam padding to his body.
C. Put his pants and jacket on. (Similar to Klunk)
D. Snap on the leather skull cover to the mechanism and skull.
E. Snap on Santa's mask and wig over the skull. Stretch the hole on his mask over the mouth lever. Do not cut the mouth hole any larger.

F. Install the bearded lower jaw, being sure that the mouth nearly meets the mask and that it is positioned straight. Snap the beard to the mask hair.
G. Snap on Santa's hat.
H. Santa's bag sits on the floor to the right of the character.

XIV. Pin the Season Greetings Banner directly over the Uncle Klunk Banner.

XV. Attach the Merry Christmas sign over the Abomination sign using the 4 wood screws provided. Paint the head of the screws red.

XVI. Video test using the Uncle Klunk adjustment tape. Check the character for any hindrances to the movements.

XVII. Run the "Set Phone" section of the adjustment tape and adjust the phone into position.

Note: to get an overall view of Santa Claus, refer to the end of the Uncle Klunk installation tape.

CHAIR CRATE

Packing List

	DESCRIPTION	PART NUMBER
1.	Abomination Sign	AQ66 - 406
2.	Banner Support	ASB - 804
3.	Banner Support	ASB - 904
4.	Guest Chair	B Chair 1
5.	Chair Bases (2)	AQ62 - 125
6.	Table Base	AQ63 - 125
7.	On the Air Sign	AQ64 - 402
8.	Phone Mechanism	M22160
9.	Banana Mechanism	M22180
10.	Abomination Harness	M22662
11.	Coo Coo Box	
12.	Costume Box	
13.	Clock	B Clock 3
14.	Brackets (2)	AQ21 - 3301
15.	Banana	AQ69 - 108
16.	Phone	AQ68 - 303
17.	Fiberglass Rt. Foot	AQ65 - 048
18.	Latex Rt. Shoe	AQ34 - 202
19.	Flower Vase	AQ72 - 105
20.	Red Phone Stand	AQ68 - 103
21.	Fruit Bowl	AQ34 - 419
22.	Shirt	AQ33 - 1516
23.	Right Cuff	AQ33 - 2208
24.	Left Cuff	AQ33 - 2308
25.	Pants	AQ33 - 3811
26.	Bowtie	AQ33 - 5007
27.	Jacket	AQ33 - 5701

PACKING LIST

1.	Klunk	B Klunk 33
2.	Camera	AQ61-240
3.	Computer	E31-406
4.	Table	AQ20-810
5.	Klunk Banner	21-041-050
6.	Abomination Mechansim	M22650
7.	Mom's Picture	AQ71-803
8.	Electronic Equipment	
9.	Klunk Video Tape	98-015-045
10.	Klunk Catalog	98-015-002
11.	RCA to RCA 60'	E99-400
12.	Male RCA to 2 Female RCA	24-020-246
13.	Plug Base	24-040-165
14.	Pee Wee Light	60-105-005
15.	Pee Wee Light Bulb	60-040-010

KLUNK INSTALLATION HARDWARE

	Quantity	Item
1)	12	3/8-16 x 2" bolts
	12	3/8 nuts
	12	3/8 lock washers
	24	3/8 flat washers
2)	12	#10 3/4" derdynes (hex washer head screws)
3)	10	#10 1 3/4" derdynes (hex washer head screws)
4)	16	3" #8 drywall screws
5)	3	1/4-20 x 1" bolts
6)	2	1/4-20 x 2 1/2" bolts
	9	1/4 nuts
	5	1/4 lock washers
	14	1/4 flat washers
7)	6	1/4-20 x 3" toggle bolts
8)	2	1/4-20 x 3" eye bolts
9)	4	wire crimps (28-045-917) (Abomination Sign)
10)	1	picture hanging wire (21-050-336) (Camera)
11)	8	3/8" x 2" lags
12)	10	4 D common nails
13)	100	8" tie wraps
14)	100	adhesive cable tie mounts (28-035-035)

STOCK	MAT'L.

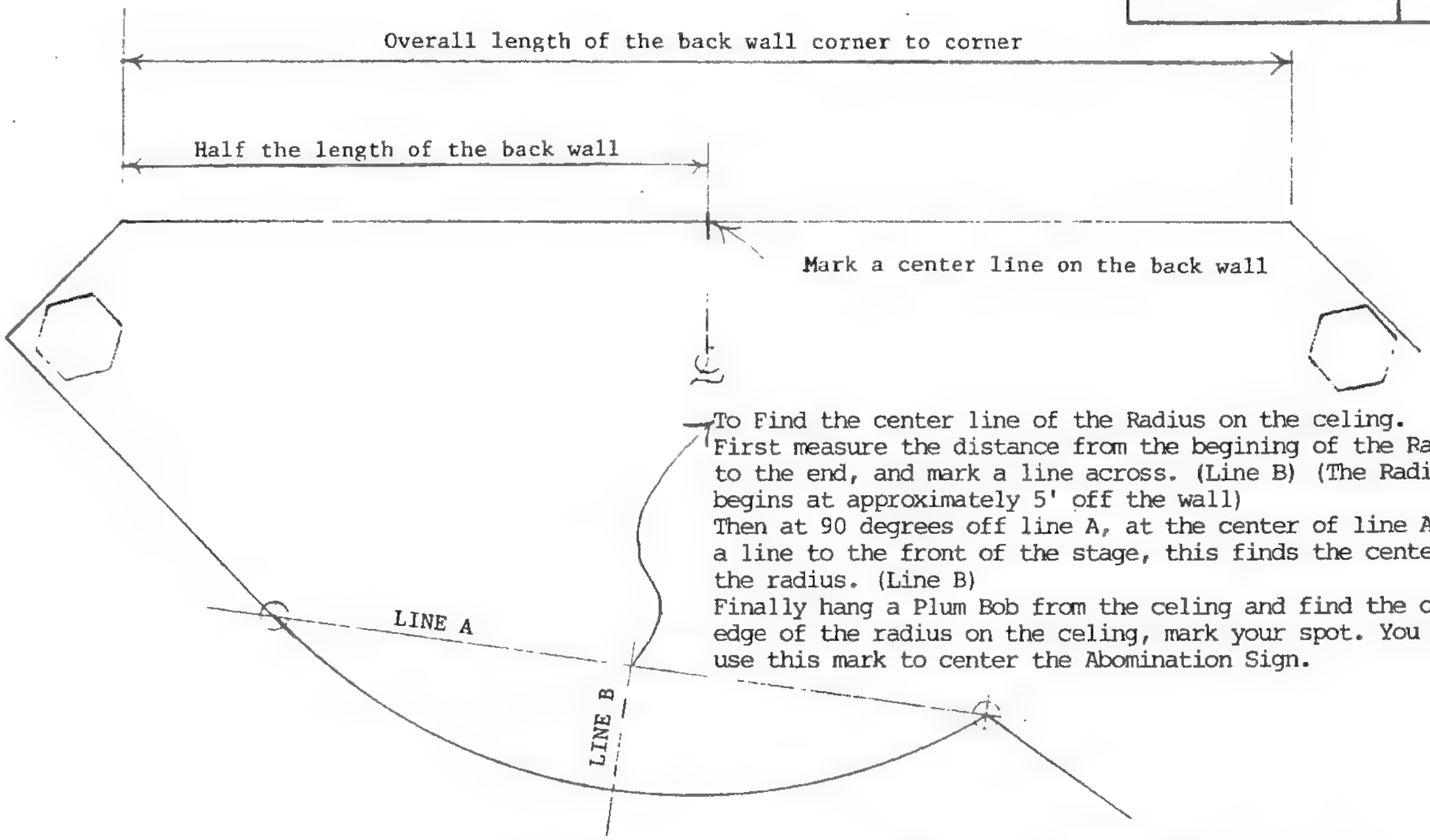

To Find the center line of the Radius on the celing.
First measure the distance from the begining of the Radius, to the end, and mark a line across. (Line B) (The Radius begins at approximately 5' off the wall)
Then at 90 degrees off line A, at the center of line A, mark a line to the front of the stage, this finds the center of the radius. (Line B)
Finally hang a Plum Bob from the celing and find the outside edge of the radius on the celing, mark your spot. You will use this mark to center the Abomination Sign.

CURTIAN MOTOR

All tol. are Non-accumulative

R. + D. APPROVAL DATE

PRODUCTION APP. DATE

Q. C. APPROVAL DATE

DEBURR AND BREAK ALL SHARP CORNERS ± .010

SCALE:

DATE: 7.12 83

DRAWN BY BD

CHK'D. BY

REVISIONS

REV.	DATE	BY

ITEM: KLUNK INSTALLATION

MAT'L:

CREATIVE ENGINEERING INC

Property of Creative Engineering, Inc. Reproduction W/O Authorization is strictly prohibited.

~~UNTOLERANCED DIM.~~
~~FRACT'L. DECIMAL~~
~~.XX ± .010~~
~~± .030 .XXX ± .005~~

DRAWING NUMBER 1A

STOCK	MAT'L.

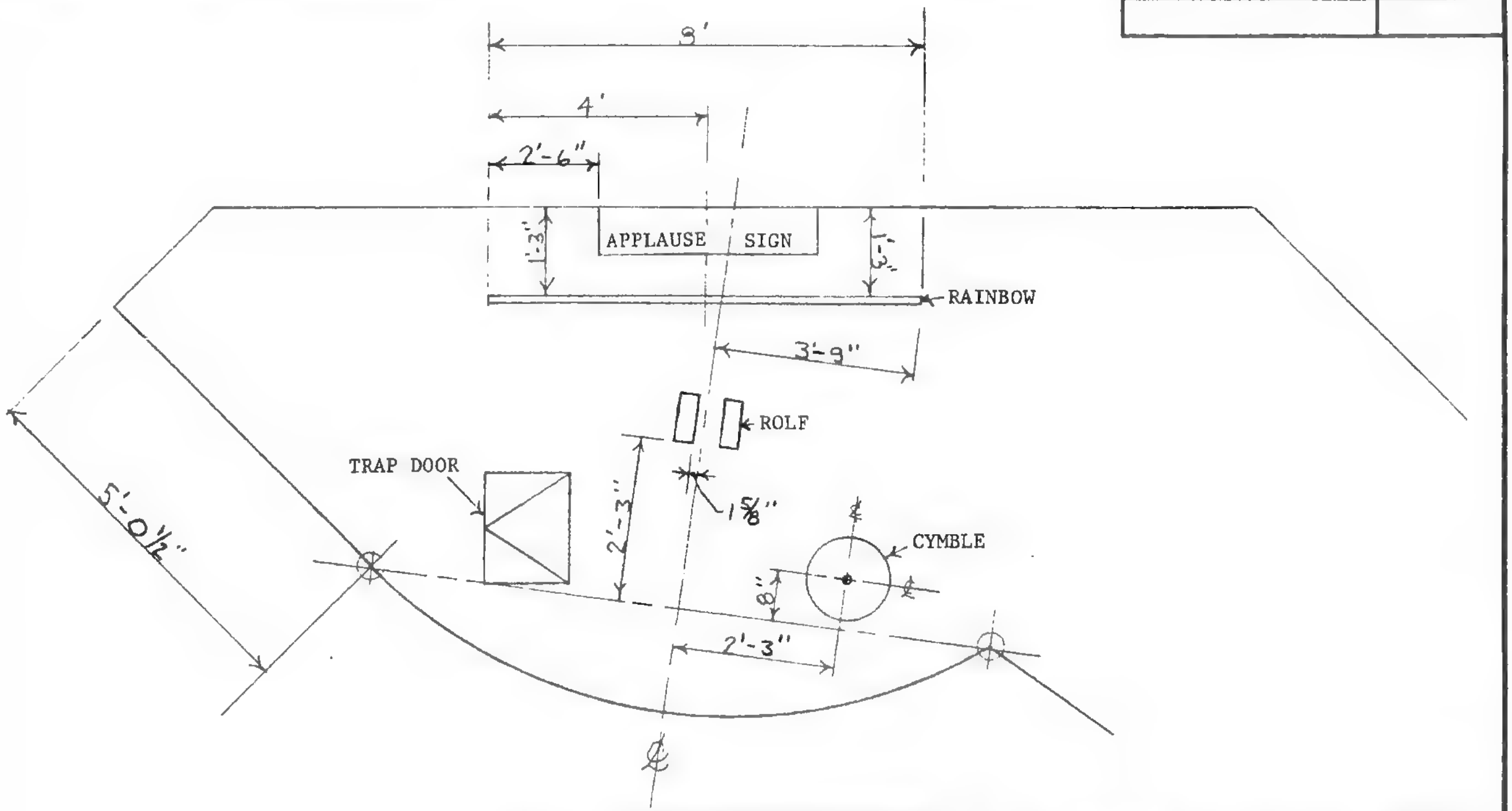

All tol. are Non-accumulative	R. + D. APPROVAL DATE	CREATIVE ENGINEERING INC	*Property of Creative Engineering, Inc. Reproduction W/O Authorization is strictly prohibited*
	PRODUCTION APP. DATE		
REVISIONS	Q. C. APPROVAL DATE	DEBURR AND BREAK ALL SHARP CORNERS ± .010	SCALE:
REV. / DATE / BY			DATE: 7·12·83
			DRAWN BY BD
			CHK'D. BY
	ITEM: ROLF STAGE FOR KLUNK INST'L.		~~UNTOLERANCED DIM. FRACT'L. DECIMAL .xx ± .010 ± .020 .xxx ± .005~~
	MAT'L:		DRAWING NUMBER 2A

STOCK	MAT'L.

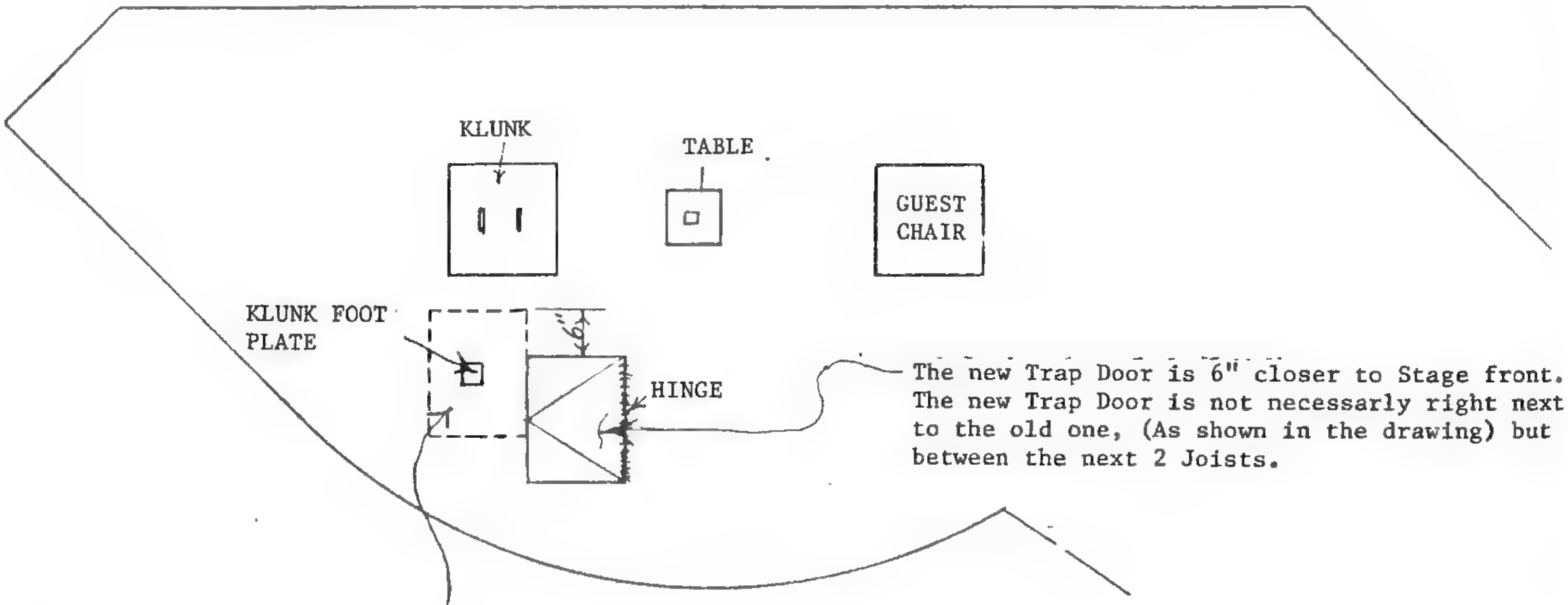

Note: Nail the old Trap Door closed.

All tol. are Non-accumulative	R.+D. APPROVAL DATE	CREATIVE ENGINEERING INC	Property of Creative Engineering, Inc. Reproduction W/O Authorization is strictly prohibited.
	PRODUCTION APP. DATE		
REVISIONS	Q. C. APPROVAL DATE	DEBURR AND BREAK ALL SHARP CORNERS ± .010	SCALE: — DRAWN BY BD
REV. DATE BY			DATE: 7·12·83 CHK'D. BY
	ITEM: KLUNK STAGE TRAP DOOR PLACEMENT		~~UNTOLERANCED DIM. FRACT'L. DECIMAL .xx ± .010 ± .020 .xxx ± .005~~
	MAT'L:		DRAWING NUMBER 3A

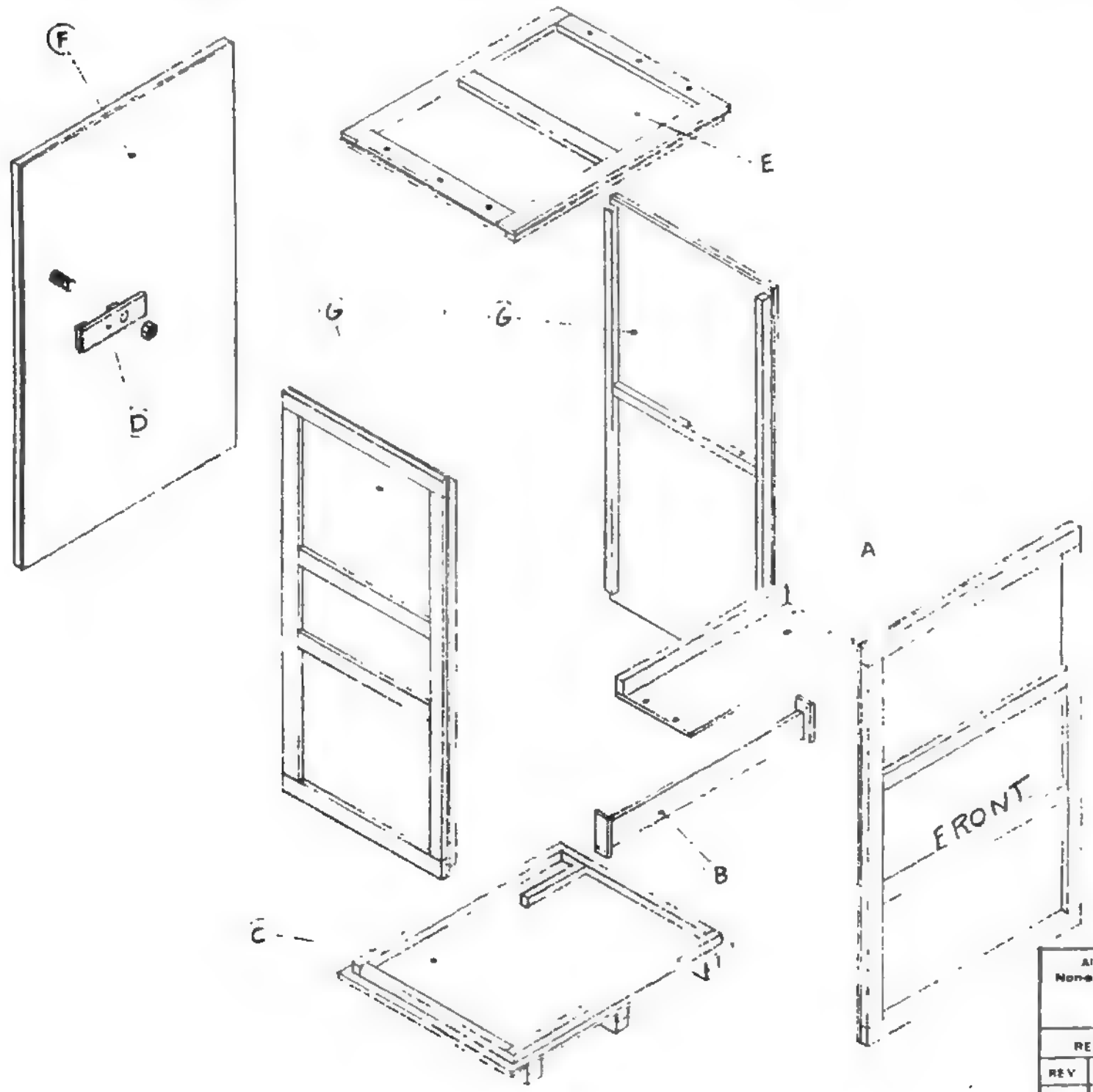

STOCK	MAT'L.

Step 1: Locate and remove front, from crate.

Step 2: From Shelf -A- remove Coo Coo box. Unscrew and remove banana and phone mounts. Attached to shelf -A- .

Step 3: Unscrew shelf -A- from crate sides and remove.

Step 4: Unscrew chair support brace -B- from crate sides and remove.

Step 5: Unscrew chair from floor -C- of crate and remove costume box, table base cover, On The Air sign, 2 chair base covers and chair.

Step 6: Remove Abomination sign from right hand side of box, loosen banner mount clamp -D- and remove banner mount.

Step 7: Disassemble crate in order given crate top -E-, back wall -F-, side walls -G- and floor -C-. Save all bolts, nuts and washers.

All tol are Non-accumulative

REVISIONS		
REV	DATE	BY

R D APPROVAL DATE

PRODUCTION APP DATE

Q C APPROVAL DATE

DEBURR AND BREAK ALL SHARP CORNERS .010

CREATIVE ENGINEERING

Property of Creative Engineering, Inc. Reproduction in any form without permission is strictly prohibited.

SCALE —

DATE 6 7 83

DRAWN BY PD

CHK'D BY

ITEM. CHAIR CRATE

MATL

UNTOLERANCED DIM
FRACT'L .020
DECIMAL .XX .010 .XXX .005

DRAWING NUMBER A

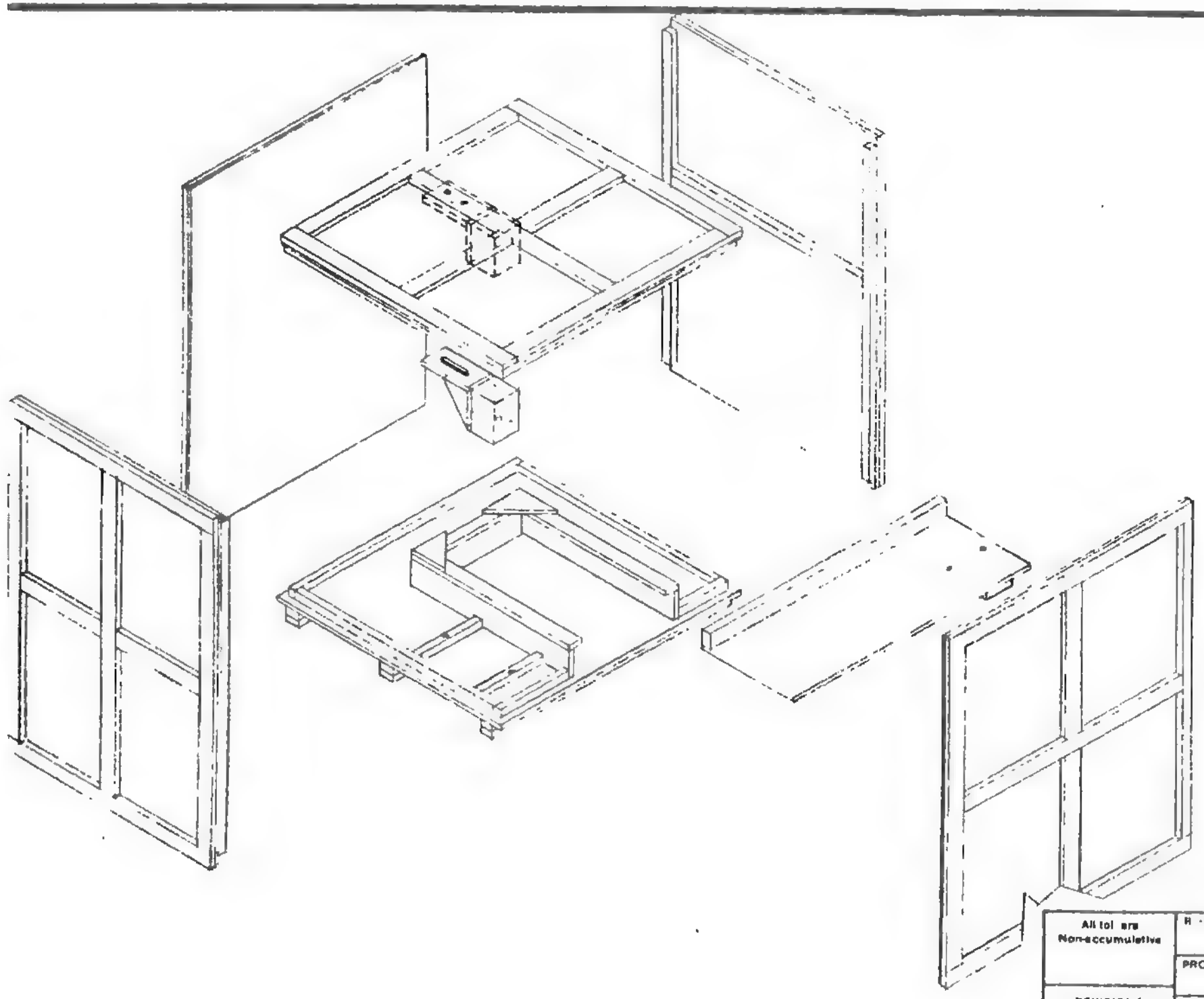

STOCK	MAT'L

1. Locate and remove front from crate.

2) From shelf -F- remove camera box, picture box and table.

3) Unhook Klunks hand from under Klunk shelf, unscrew and remove shelf - A-.

4) Remove Klunks costume box and valve bank from crate (be careful not to crimp air lines).

5) Remove abomination sign mechanism from left hand side of back wall -B-.

6) Remove head support -C- from top -D- disassemble crate in order given top, sides and bottom. Save all nuts, bolts and washers.

All tol are Non-accumulative

R & D APPROVAL DATE

PRODUCTION APP DATE

Q C APPROVAL DATE

DEBURR AND BREAK ALL SHARP CORNERS .010

REVISIONS

REV	DATE	BY

CREATIVE ENGINEERING INC

Property of Creative Engineering, Inc. Reproduction Will Not Be Permitted Unless Authorized in Writing

SCALE

DATE 6.7.83

DRAWN BY BTC

CHK'D BY

ITEM KLUNK CRATE

MAT'L

UNTOLERANCED DIM

FRACT'L	DECIMAL	
	.XX ±	.010
± 020	.XXX ±	.005

DRAWING NUMBER 5A

STOCK	MAT'L.

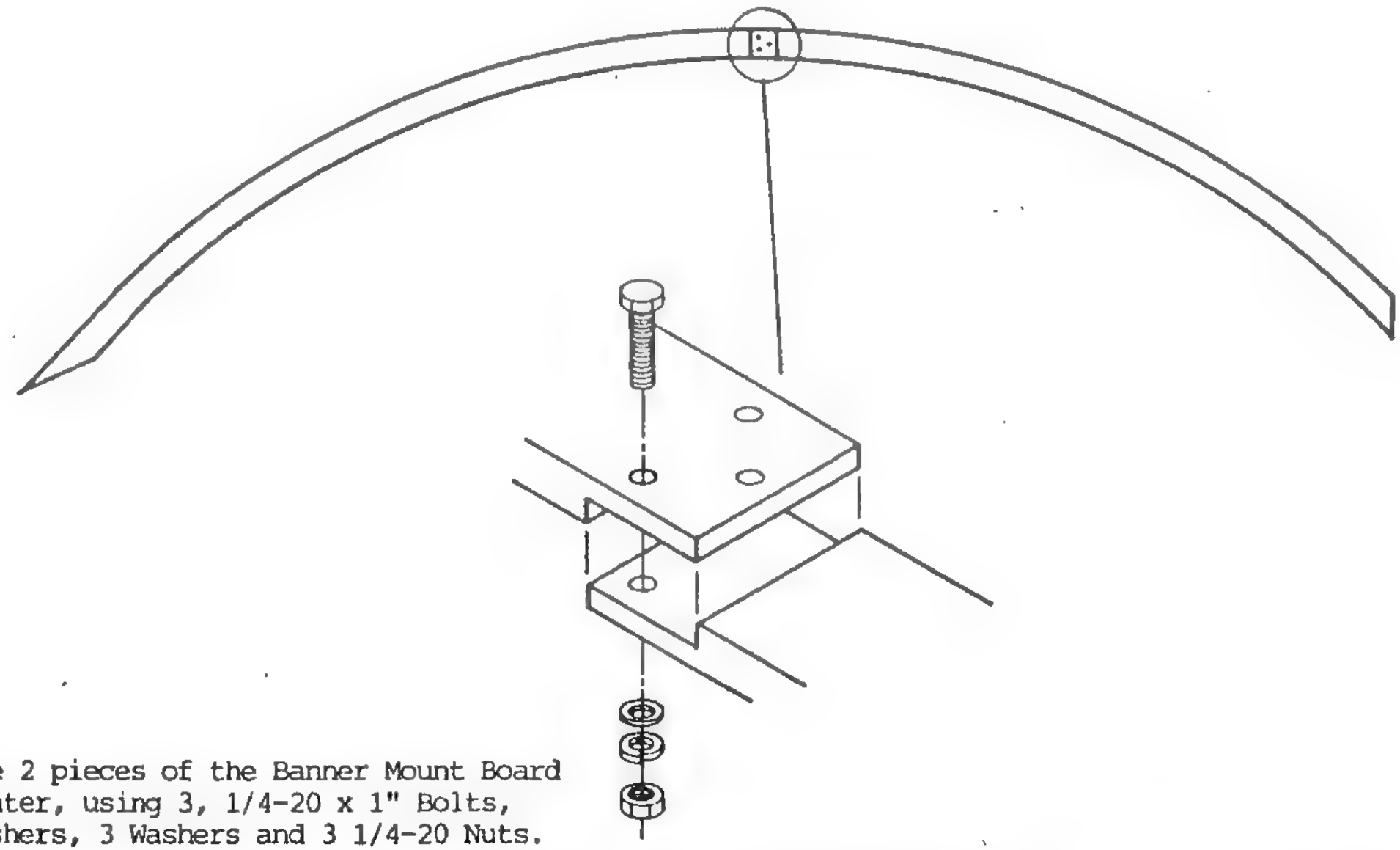

Attach the 2 pieces of the Banner Mount Board at the center, using 3, 1/4-20 x 1" Bolts, 3 Lock Washers, 3 Washers and 3 1/4-20 Nuts.

All tol. are Non-accumulative	R. + D. APPROVAL DATE	CREATIVE ENGINEERING INC	Property of Creative Engineering, Inc. Reproduction W/O Authorization is strictly prohibited.
	PRODUCTION APP. DATE		
REVISIONS	Q C. APPROVAL DATE	DEBURR AND BREAK ALL SHARP CORNERS ± .010	SCALE:
REV. DATE BY			DATE: 8·3·83
			DRAWN BY BD
			CHK'D. BY
	ITEM KLUNK BANNER MOUNT BOARD		UNTOLERANCED DIM. FRACT'L. ± 020 DECIMAL .xx ± .010 .xxx ± .005
	MAT'L:		DRAWING NUMBER 6

STOCK	MAT'L

Mom's picture is 18 1/2" down from the Header Board and 1 1/2" off the back wall.

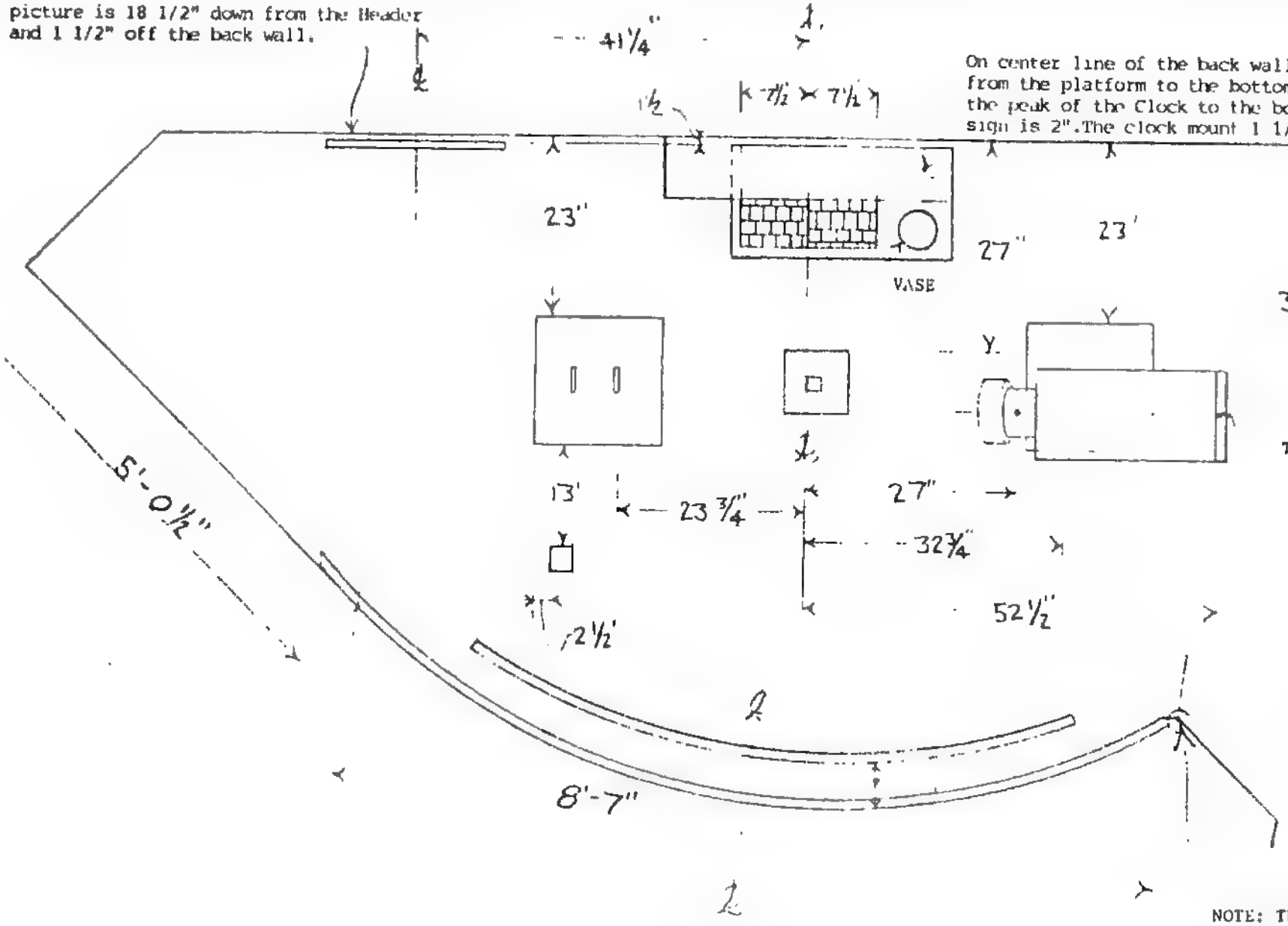

On center line of the back wall, the Coo Coo Clock 4'-4" from the platform to the bottom of the Clock Shelf. From the peak of the Clock to the bottom of the "ON THE AIR" sign is 2".The clock mount 1 1/2" off the back wall.

The Dimensions are taken from the eyebolts in the celing.

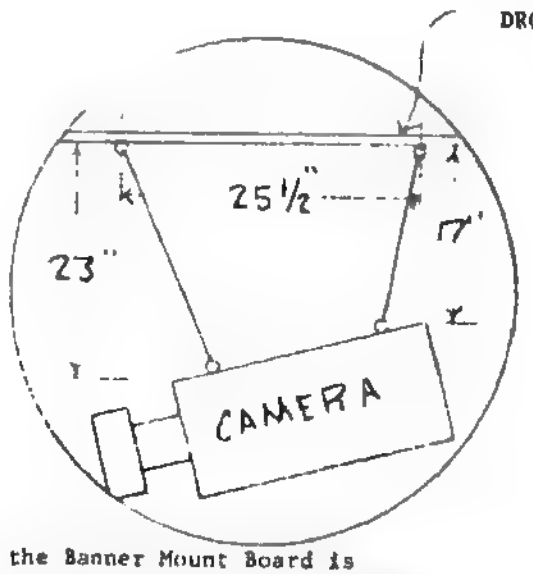

NOTE: The point of the Banner Mount Board is approximately square with the corner of the Stage

The Abomination Sign mounts 6" behind the Banner

CREATIVE ENGINEERING, INC.

Property of Creative Engineering Inc Reproduction W/O Authorization is strictly prohibited

REVISIONS		
REV	DATE	BY
1	4/83	ED
3	4/26/83	ED

SCALE

DATE 4-26-83

APPROVED BY DATE 4-27-83

DEBURR AND BREAK ALL SHARP CORNERS .010

DRAWN BY ED

CHK'D BY

ITEM: UNCLE KLUNK AND PROPS STAGE LAYOUT

TOLERANCES
FRACT'L .020
DECIMAL .XX ± .010 .XXX ± .005

DESCRIPTION

DRAWING NUMBER 7A

STOCK	MAT'L.

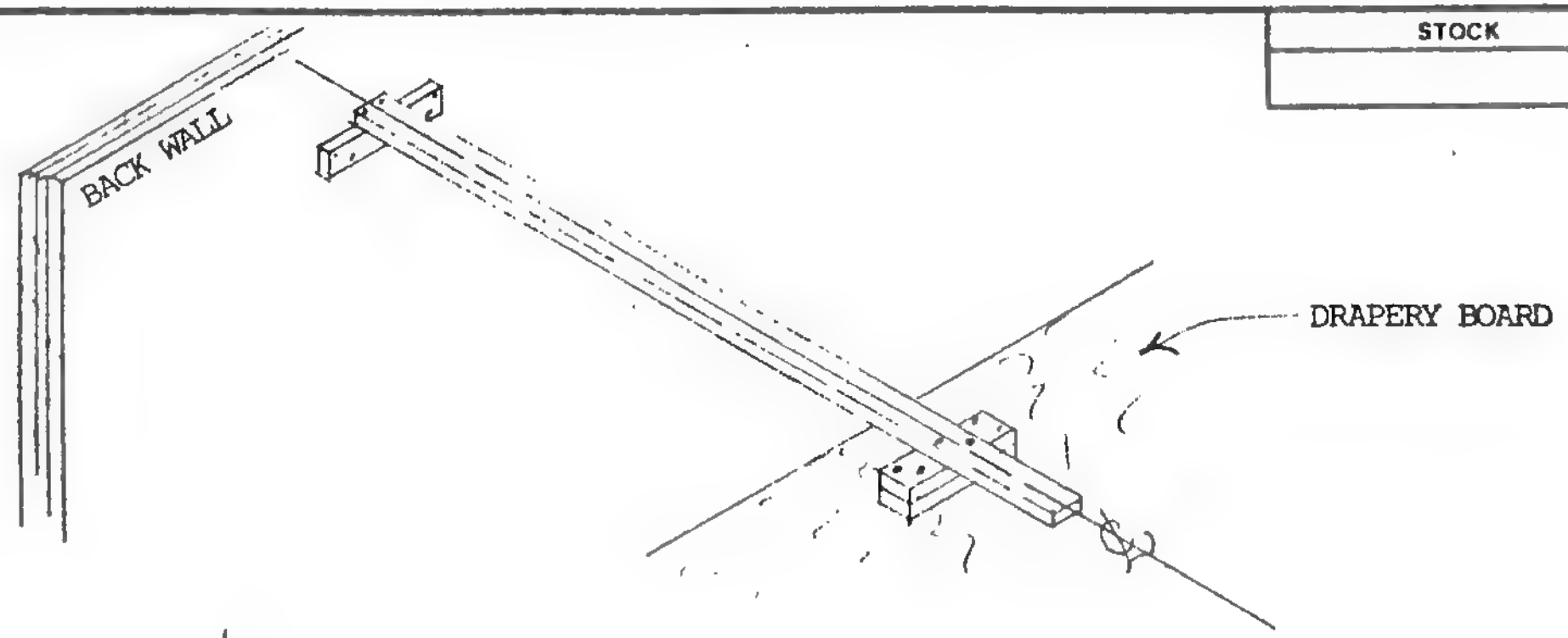

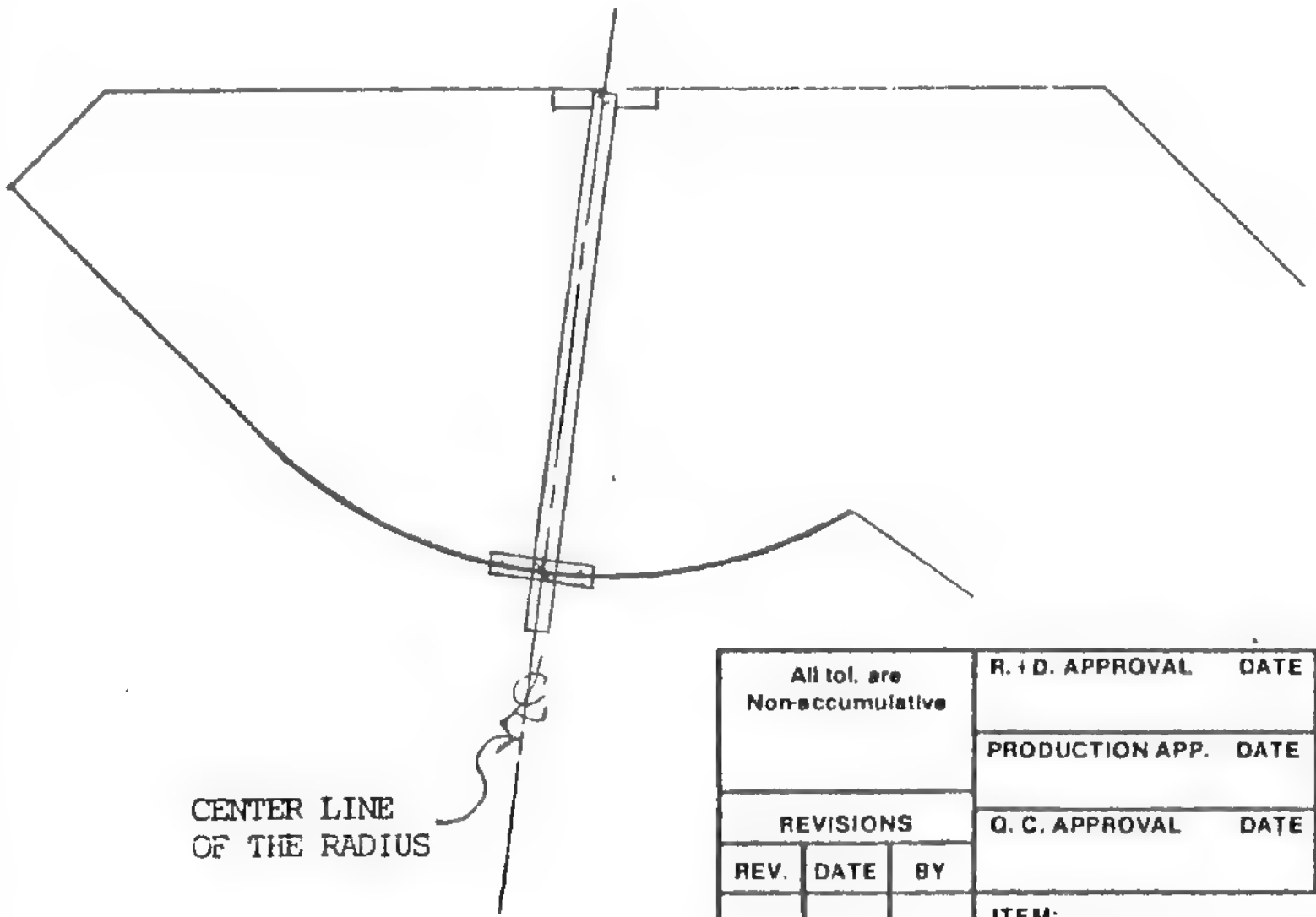

Attach the front 2 mount pieces, using 3" Drywall screws. Lay onto the front supports the 2"x 4"x 8' length of wood. Place a Level on top of the 8' board, level the board and mark a line on the back wall. Attach the third support piece to the backwall at your level line using 3" Drywall screws. Attach the 8' length of board to the 3 support pieces using 3" Drywall screws.

All tol. are Non-accumulative	R. + D. APPROVAL DATE	CREATIVE ENGINEERING INC	Property of Creative Engineering, Inc. Reproduction W/O Authorization is strictly prohibited
REVISIONS	PRODUCTION APP. DATE		
REV. / DATE / BY	Q. C. APPROVAL DATE	DEBURR AND BREAK ALL SHARP CORNERS ± .010	SCALE: / DATE: 8·4·83 / DRAWN BY BD / CHK'D. BY
ITEM: KLUNK ABOMINATION SIGN			UNTOLERANCED DIM. FRACT'L. ± 020 DECIMAL .xx ± .010 .xxx ± .005
MAT'L:			DRAWING NUMBER A.

STOCK	MATL.

Step 1) Attach the Support Frame in the ceiling, and attach the mechanism to the Support frame, as indicated in the written text. (Page 2, Steps C 1,2,3,4 and D 1,2,3)

Step 2) Attach the Springs -A-, to the Eyebolts -B- that are attached to the sign. Note the spring has S-Hooks attached, one S-Hook has a end that is not bent over, after attaching the Spring -A- close over the end of the S-Hook using pliers.

Step 3) Measure and note the dimension from the Guide Plate -C-, to the bottom of the Ceiling. To the noted dimension add 4" (the distance the Sign hangs below the Ceiling) add 18" (the length of the Cylinder stroke) to this add 12", the final dimension is the length your Safety Cables -D- should be when assembled.

Step 4) Attaching one of the Safety Cables.
Prop up the Sign at approximatly 4' off the Stage. (Use 2 ladders one at each end of the Abomination Sign, if possible) pass the loose end of one Safety Cable -D- through the Spring -A-. Then at the length determined in Step 3, attach a Cable Thimble -E- and a Cable Crimp -F-, close the crimp. Attach the one Safety Cable -D- to the Sign using the hardware suplied. (1- 1/4"-20 x 1 1/2" bolt, 2 washers, 1 lock washer and one 1/4"-20 nut) Note the assembly in the drawing.

Step 5) Attaching the second Safety Cable.
Place a leveling tool on top of the Sign and have someone hold the Sign level for you. Route the Cable through the Spring and attach the second Safety Cable using the same hardware you used for the first. (Don't close the cable Crimp until you are sure the sign is level)

Step 6) Attaching one main cable.
The top of the Sign should be 22" below the Ceiling, with the cylinder in the fully open position. Have someone hold the Sign at the height for you. Attach the Main Cable to the S-Hook using a Cable Thimble -E- and a Cable Crimp -F-, Allow the Spring to extend from the weight of the Sign, and double check your 22" height before closing the Cable Crimp.

Step 7) Attaching the second Main Cable.
Place a leveling tool on top of the Sign, and have someone hold it level for you. Attach the Main Cable to the S-Hook. Don't forget to allow for Spring tension, double check all dimensions, and make sure the sign is level before closing the final Cable Crimp. (The Abomination Sign being level is more important, than the height being exactly 22") Reinstall the ceiling tiles, and cut out 5" clearance holes around where the cables pass through the ceiling tiles.

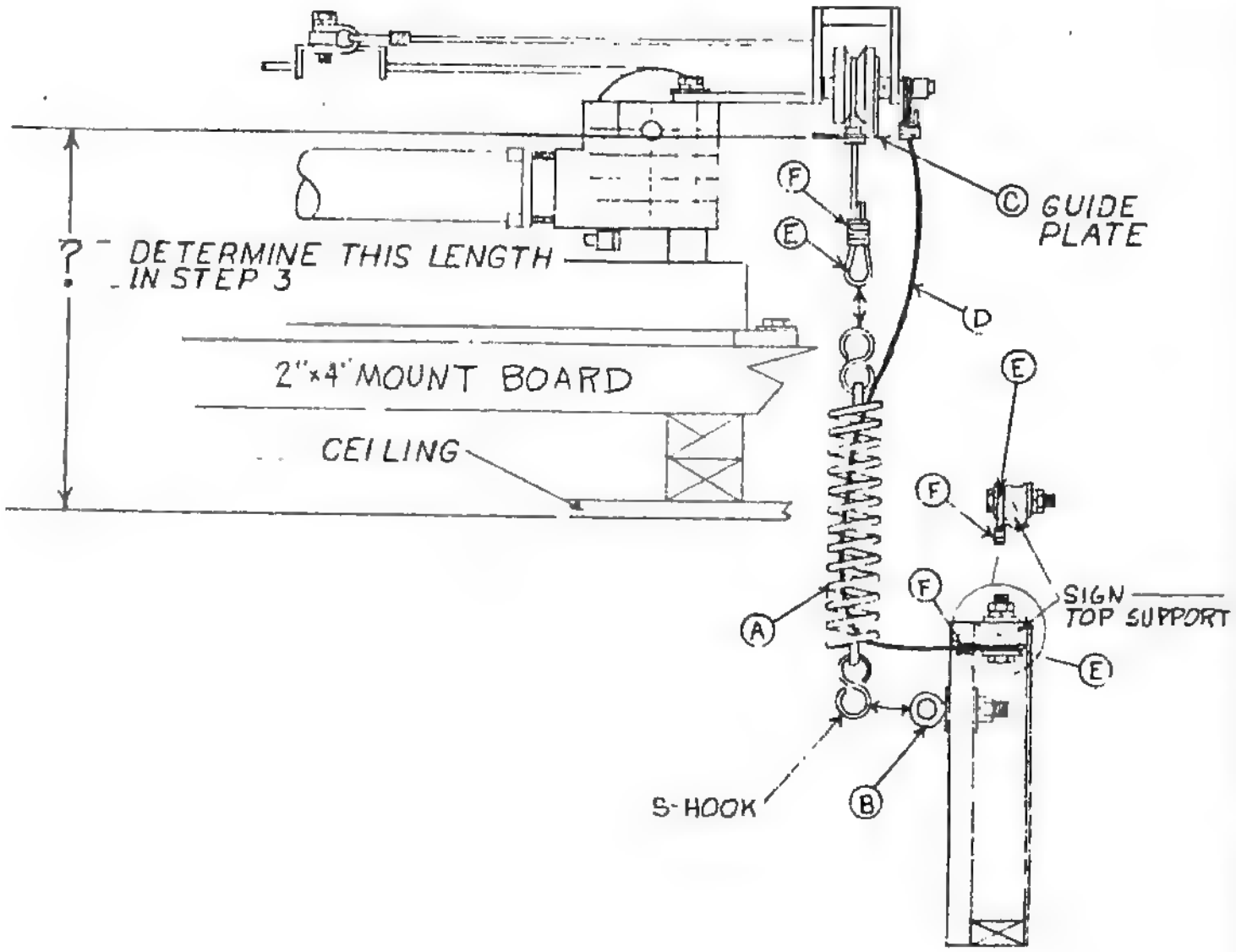

All tol. are Non-accumulative	R·D APPROVAL DATE	CREATIVE ENGINEERING, INC.
	PRODUCTION APP DATE	
REVISIONS: REV / DATE / BY	Q C APPROVAL DATE	DEBURR AND BREAK ALL SHARP CORNERS .010
		SCALE
		DATE 9-11-82
		DRAWN BY SD
		CHK'D BY
ITEM: ABOMINATION SIGN INSTALLATION		UNTOLERANCED DIM. FRACTL DECIMAL .010 .005
MATL		DRAWING NUMBER 8B

FIG. 1A

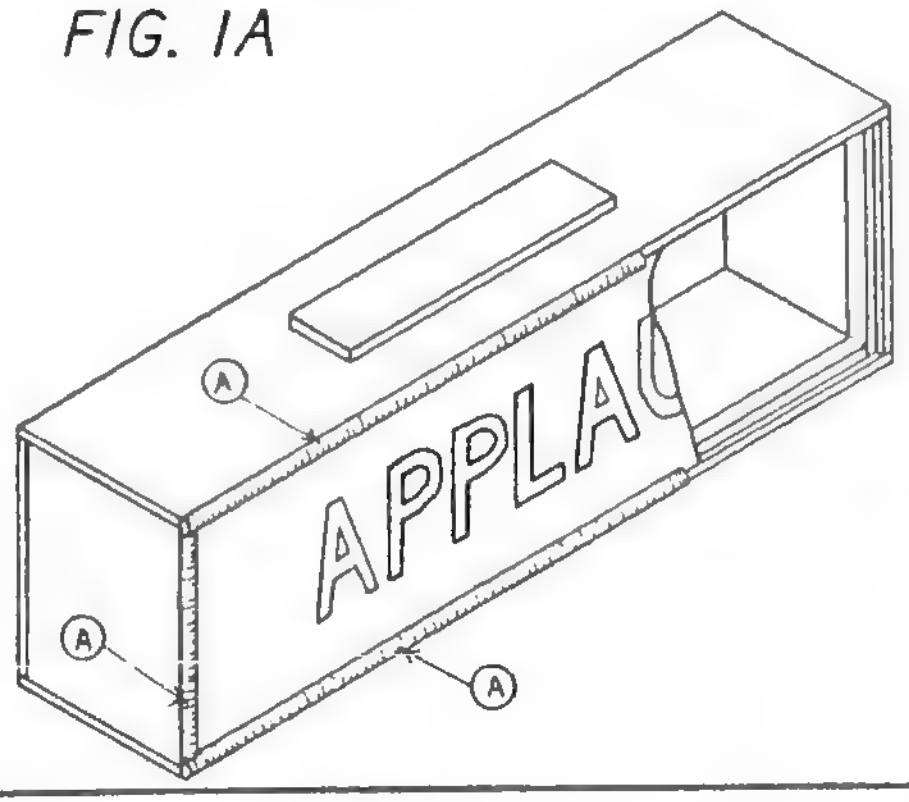

DISASSEMBLY: (use Dwg. FIG 1A)

Step 1) Pull the plug to the Applause Sign.

Step 2) Remove the old molding pieces -A-, by pulling them off with your hands if possible. If you can't pull them off with your hands, use a flat Screwdriver to pry them off. Be careful not to scrach the paint.

Step 3) Remove the painted plexiglass Applause Sign from the box. The plexiglass sign should not be glued in, if it is pry it out using a flat Screwdriver. (Be very Carefull not to crack or scrach the plexiglass)

REASSEMBLY (use dwg. FIG 2A)

Step 1) Attach the new Molding pieces -A- and -B- to the Light Box -C- using 4D Finishing Nails. (Note: Pilot holes are pre drilled through the frame) DO NOT nail on the end molding piece -D-.

Step 2) Slide the old Applause Sign into the attached, grooved, molding pieces.

Step 3) Attach the end molding piece -D- to the nailed on Molding pieces using 2, #6 x 1 1/4" Flat head wood screws -E-.

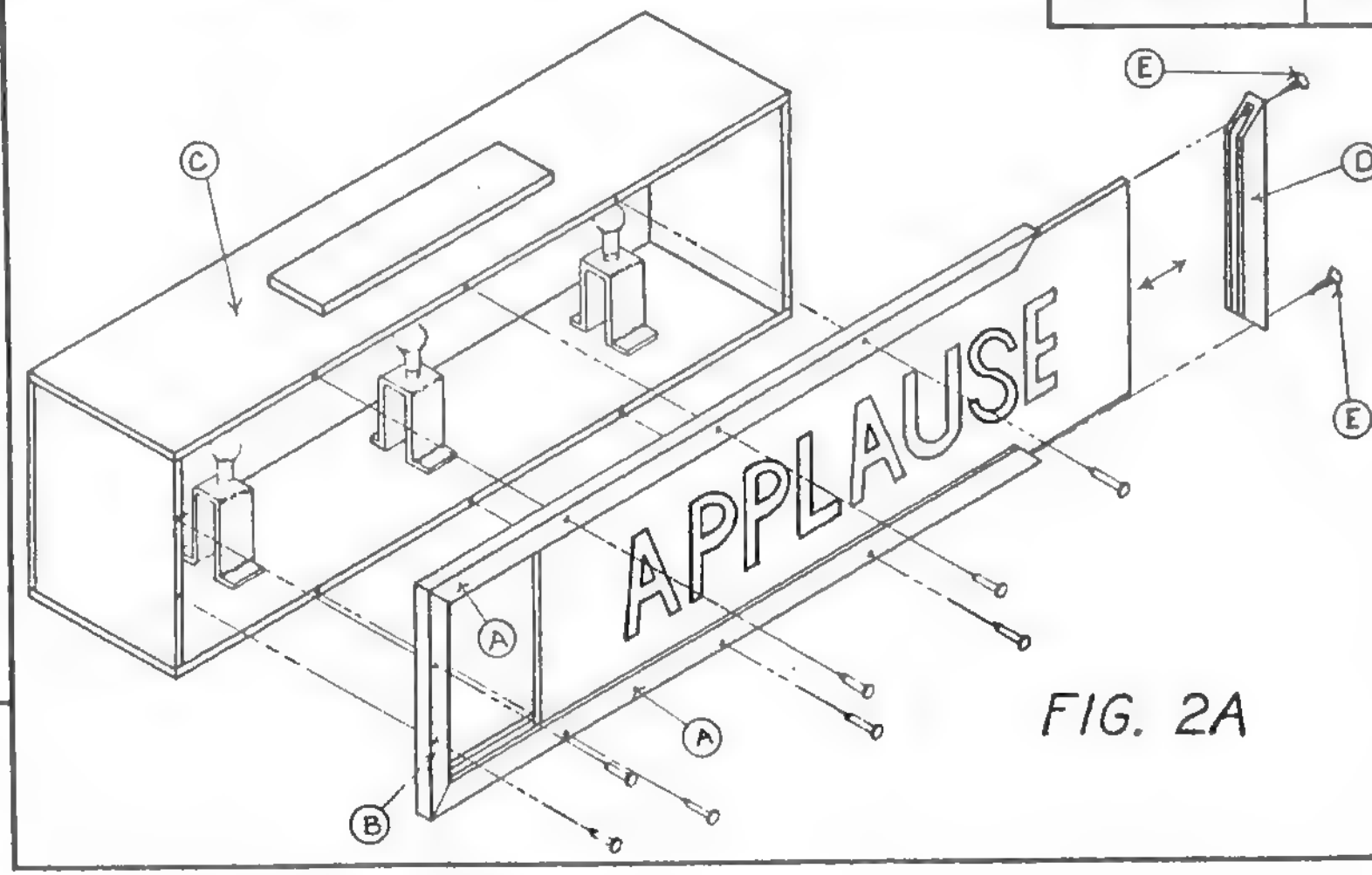

FIG. 2A

Step 4) Plug back in the Sign, use black touch up paint Part #APK 201 to cover any scratches.

Special: To change over from the "APPLAUSE" Sign to the "ON THE AIR" Sign used with Klunk.
First unscrew and remove the end molding piece -D-, then slide out the old sign and slide back in the new sign. Finally reattach the end molding piece -D-, and touch up any scratched paint.

STOCK	MAT'L.

All tol are Non-accumulative

R · D APPROVAL DATE

PRODUCTION APP DATE

Q C APPROVAL DATE

REVISIONS		
REV	DATE	BY

CREATIVE ENGINEERING

Property of Creative Engineering. For Reproduction write for permission or unless published

DEBURR AND BREAK AL. SHARP CORNERS .010

SCALE

DATE 8-3 83

DRAWN BY

CHK'D BY

ITEM APPLAUSE SIGN RETRO FIT

MAT'L

UNTOLERANCED DIM
FRACT'L .020 DECIMAL .XX ± .010 .XXX ± .005

DRAWING NUMBER 9A

STOCK	MAT'L.

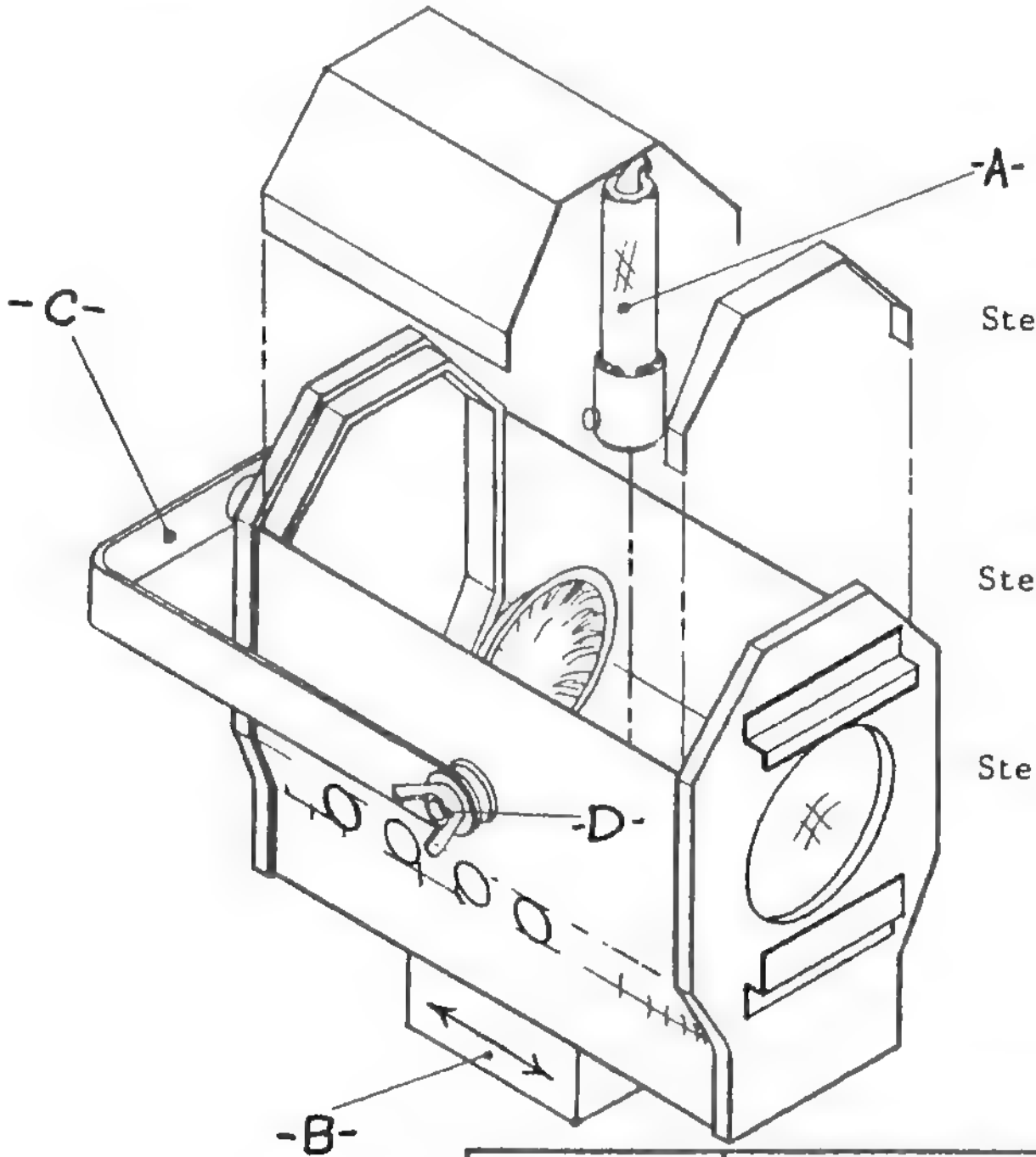

Step 1) Lamp Installation
Handle the Lamp -A- using a clean rag, if you do touch it directly, clean it using Rubbing Alcohol. The Lamp is a push in and turn to lock type, HANDLE CAREFULLY.

Step 2) Mounting
Hang the light using the Mounting Bracket -C-. The Lamp -A- should point up with the Lamp Slide -B- to the bottom.

Step 3) Adjustment
The light is adjustable by pushing the Lamp Slide -B- foward and back.
Adjust the tilt of the light by loosening and tightening of the Wing Nut -D-.

All tol. are Non-accumulative	R. + D. APPROVAL DATE	CREATIVE ENGINEERING INC	Property of Creative Engineering, Inc Reproduction W/O Authorization is strictly prohibited.
	PRODUCTION APP. DATE		
REVISIONS	Q. C. APPROVAL DATE	DEBURR AND BREAK ALL SHARP CORNERS ± .010	SCALE: / DRAWN BY BD
REV. / DATE / BY			DATE: 8/1/83 / CHK'D. BY
	ITEM: MINI SPOT INSTALLATION		UNTOLERANCED DIM. FRACT'L. ± 020 / DECIMAL .xx ± .010, .xxx ± .005
	MAT'L:		DRAWING NUMBER 10

The small Spot Light is centered on the Coo Coo Clock face.
Spotlight #7 covers, in a square, the entire stage.
Spotlight #8 is centered on Klunk's Chest.
Note: Adjust the Lights to the outside of the line shown on the drawing.

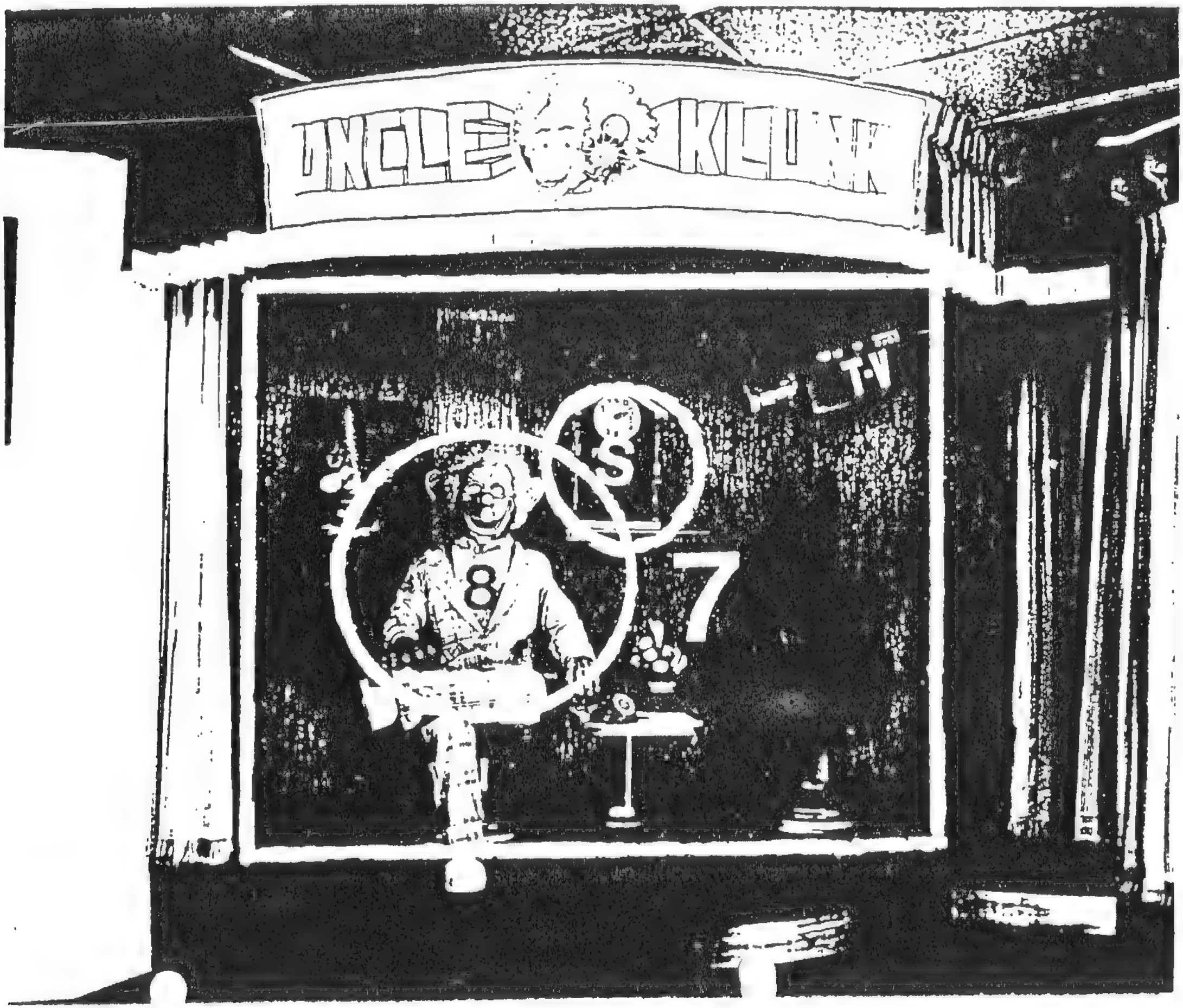

DWG. IIA

July 8, 1983

UNCLE KLUNK

Critical Adjustments

Section (A) Necessary tools, Drawing standards and Notes.

Section (B) Critical Adjustment Chart.

Section (C) Basic drawings of movements in need of Critical Adjustments, with reference to the Critical Adjustment Chart.

BY
PROCESS DEVELOPMENT
CREATIVE ENGINEERING, INC.

SECTION -A-

1) Necessary Tools:

1, 6" Steel Ruler

1, 12' Tape Measure

1, Steel Protractor
(Suggested type: Sears Craftsman #9-4029)

2) Drawing Standards:

All critical adjustments will be made using the angular dimensions, unless otherwise noted in the drawing, section -C-. The Pin to Pin dimensions on the Critical Adjustment are approximate.

3) Notes:

The Pin to Pin dimensions referred to, is a measurement from the center of the rear cylinder mount hole, to the center of the front cylinder mount hole.

On the Critical Adjustment chart a (+) or (-) tolerance is referred to, this means that the Pin to Pin or angular measurement can vary the allotted amount.

(Example: The Head Up, Down adjustment on the Critical Adjustment chart has a Pin to Pin of 10 3/16" (+) (-) 1/8", and an angle of 154 degrees (+) (-) 1 degree or a Pin to Pin from 10 1/16" to 10 5/16" and an angle from 153 degrees to 155 degrees.)

For a drawing of the protractor required in most of the critical adjustments, and it's proper use refer to section -C-, drawing AA.

All drawings deal with the character in a static, pressurized position. Except the Coo Coo Bird which is measured in the open position for ease in measurement.

SECTION -B-

Critical Adjustment Chart

Description	Cyl. open Cyl. Closed	Cyl. Pin to Pin +- 1/8"	Degree	Tolerance On Angle	Drawing Number
Mouth Lever*	C.C.	7 1/4"	90 D.	N/A	1A
Left, Right Ear	C.C.	4 9/16"	100 D.	+1-2 D.	2A
Left, Right Eyes*	R.C. F.O.	8 11/16"	90 D.	+-1 D.	3A
Eye Lids*	R.C. F.O.	6 7/8"	N/A	N/A	4A
Head Up, Down	C.O.	10 3/16"	154 D.	+-1 D.	5A
Head Left*	C.C.	3 3/8"	N/A	N/A	6A
Head Right*	C.C.	3 3/8"	110 D.	+-1 D.	6A
Left Arm Swing	C.C.	7 3/16"	180 D.	+-1 D.	7A
Left Arm Raise	C.C.	7 1/8"	125 D.	+-1 D.	8A
Left Arm Twist	C.O.	6"	80 D.	+-1 D.	9A
Left Elbow	C.C.	7 1/2"	168 D.	+-1 D.	10A
Left Wrist Twist	C.O.	4 13/16"	118 D.	+-1 D.	11A
Left Wrist	C.C.	2 3/4"	113 D.	+-1 D.	12A
Thumb	C.O.	3 3/4"	130 D.	+-1 D.	13A
Right Arm Raise	C.C.	6"	115 D.	+-1 D.	14A
Right Arm Twist	C.O.	6"	90 D.	+-1 D.	15A
Right Elbow	C.C.	7"	95 D.	+2-1 D.	16A
Right Wrist	C.O.	7 1/8"	180 D.	+-2 D.	17A
Left Foot Wiggle*	C.C.	3 3/8"	128 D.	+-2 D.	18A
Chair Left Right	R.C. F.O.	8 3/16"	0 D.	+-1 D.	19A
Chair Lean	C.O.	11 3/4"	95 D.	+2-1 D.	20A
Bird Mouth	C.C.	5 1/16"	90 D.	+-1 D.	21A
Bird Carrier*	C.O.	9 1/4"	130 D.	+-2 D.	22A

R.C. F.O. Rear Cylinder Closed, Front Cylinder Open

* Refer to the Drawing for complete information

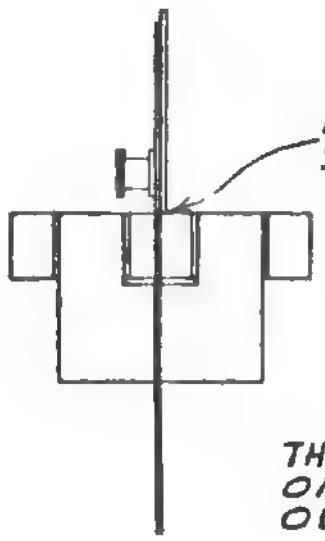

THE ANGLE CAN BE MEASURED ON THE INSIDE OR THE OUTSIDE OF THE HINGE

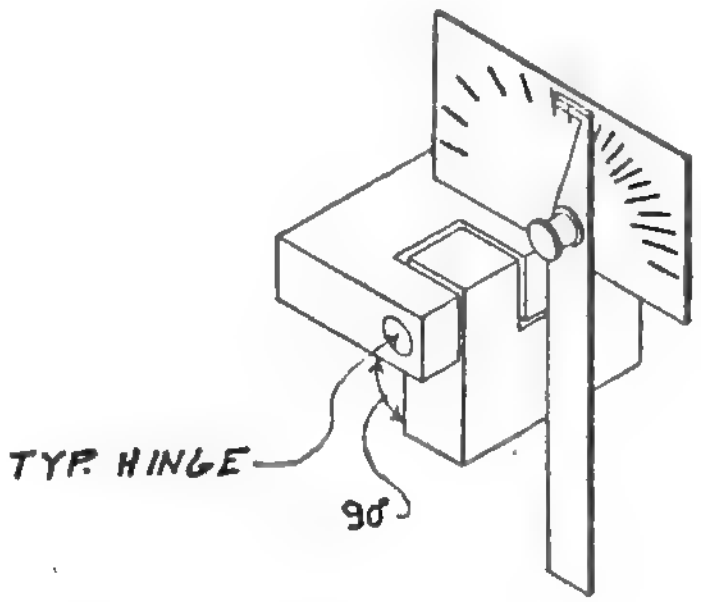

CORRECT USAGE

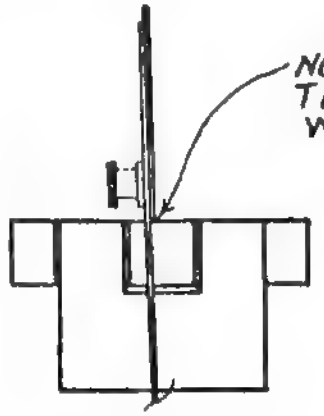

INCORRECT USAGE

TILTING AND, OR TWISTING OF THE PROTRACTOR OFF SQUARE WITH THE HINGE WILL CAUSE A INCORRECT READING

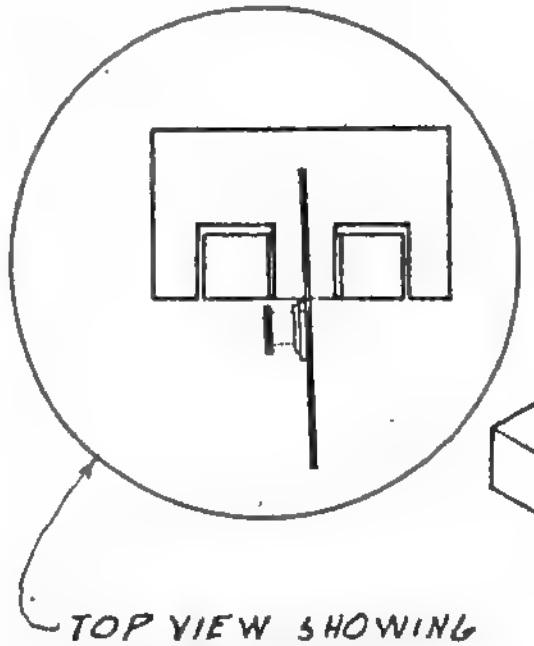

TOP VIEW SHOWING THE PROTRACTOR TWISTED OFF SQUARE

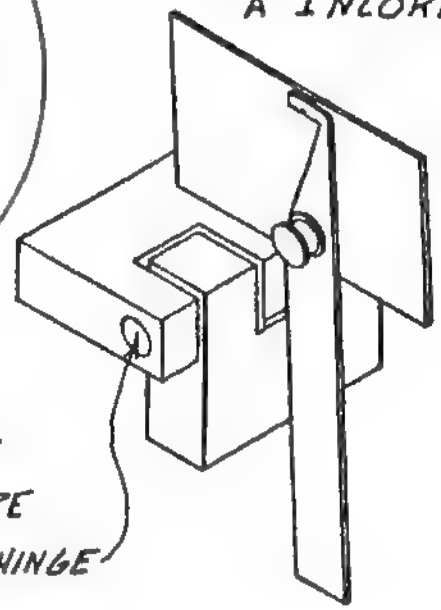

STOCK	MAT'L.

All tol are Non-accumulative	R·D APPROVAL DATE 7-16-83	CREATIVE ENGINEERING INC.
REVISIONS REV / DATE / BY	PRODUCTION APP DATE	
	QC APPROVAL DATE	DEBURR AND BREAK ALL SHARP CORNERS .010 / SCALE / DATE 6·29·83 / DRAWN BY BD / CHK'D BY
ITEM: PROPER USAGE OF PROTRACTOR		UNTOLERANCED DIM. FRACTL. ± .020 DECIMAL .XX ± .010 .XXX ± .005
MATL:		DRAWING NUMBER AA

STOCK	MAT'L.

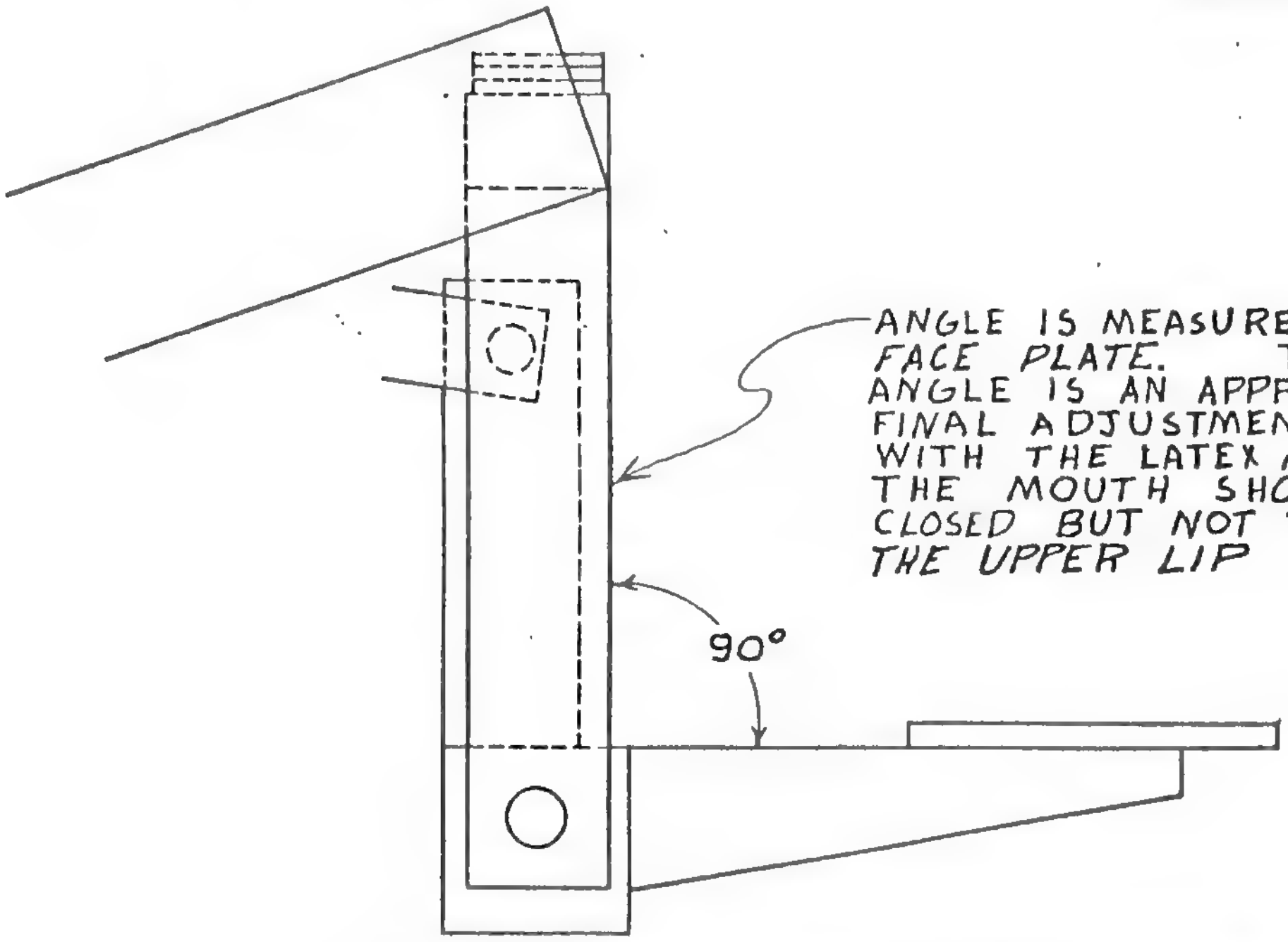

All tol. are Non-accumulative	R. + D. APPROVAL DATE 7-83	CREATIVE ENGINEERING INC	Property of Creative Engineering, Inc. Reproduction W/O Authorization is strictly prohibited
REVISIONS	PRODUCTION APP. DATE		
REV. | DATE | BY	Q. C. APPROVAL DATE	DEBURR AND BREAK ALL SHARP CORNERS ± .010	SCALE: — DRAWN BY BD
			DATE: 6·22·83 CHK'D. BY
	ITEM: SIDE VIEW OF HEAD SHOWING MOUTH LEVER ONLY		UNTOLERANCED DIM. FRACTL. DECIMAL .XX ± .010 .XXX ± .005
	MAT'L:		DRAWING NUMBER 1-A

STOCK	MAT'L.

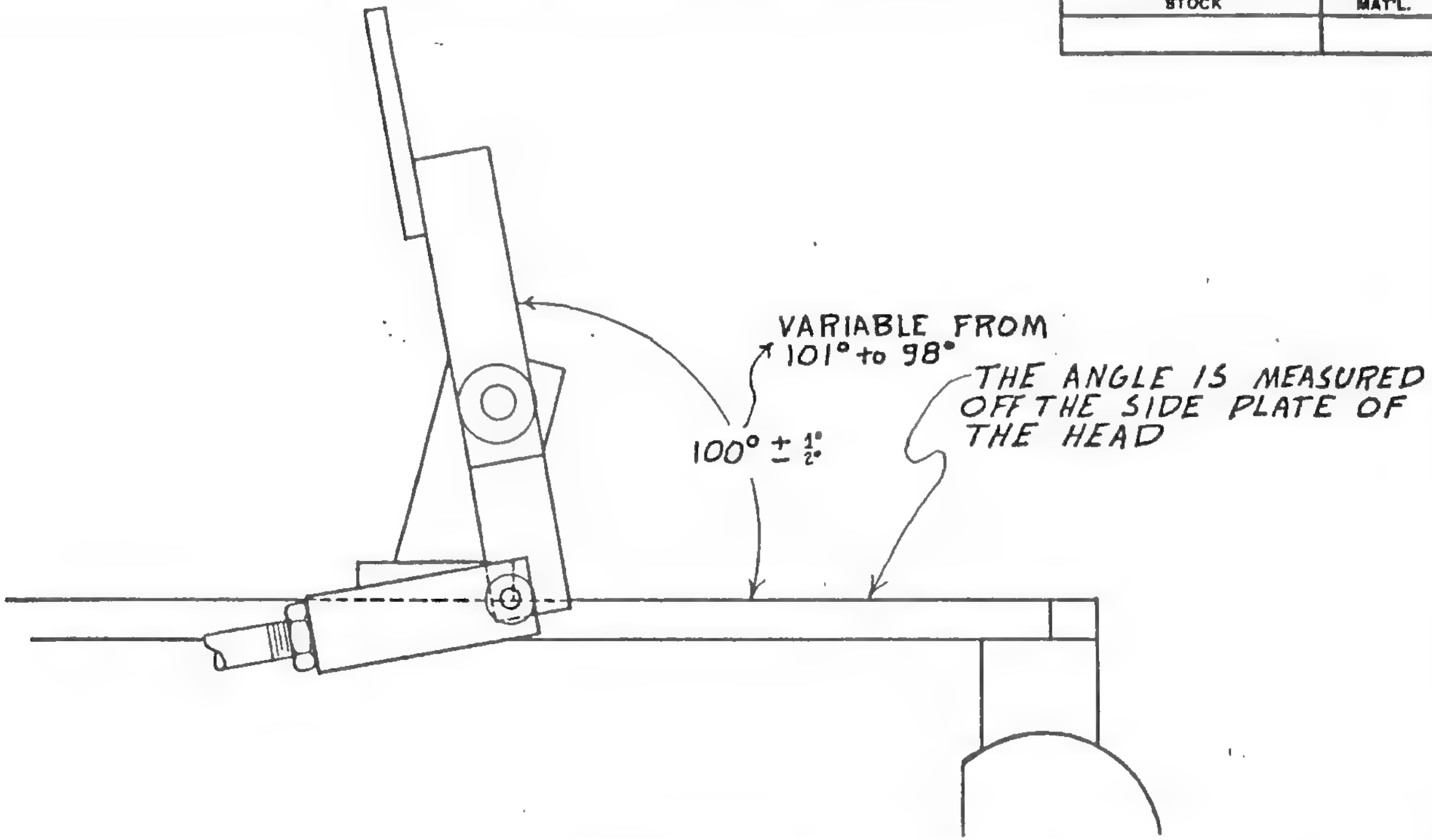

All tol. are Non-accumulative	R. + D. APPROVAL DATE 7-83	CREATIVE ENGINEERING INC	Property of Creative Engineering, Inc. Reproduction W/O Authorization is strictly prohibited
	PRODUCTION APP. DATE		
REVISIONS	Q. C. APPROVAL DATE	DEBURR AND BREAK ALL SHARP CORNERS ± .010	SCALE: ——— DRAWN BY ED
REV. DATE BY			DATE: 6-22-83 CHK'D. BY
	ITEM: TOP VIEW OF HEAD SHOWING THE EAR LEVER		~~UNTOLERANCED DIM. FRACT'L ± DECIMAL .xx ± .010 .xxx ± .005~~
	MAT'L:		DRAWING NUMBER 2

STOCK	MAT'L.

THE BACK OF THE EYE BALLS ARE CUT OFF FLAT. LAY A 6" RULER ACROSS THE 2 EYE BALLS TO SQUARE THEM TO EACH OTHER

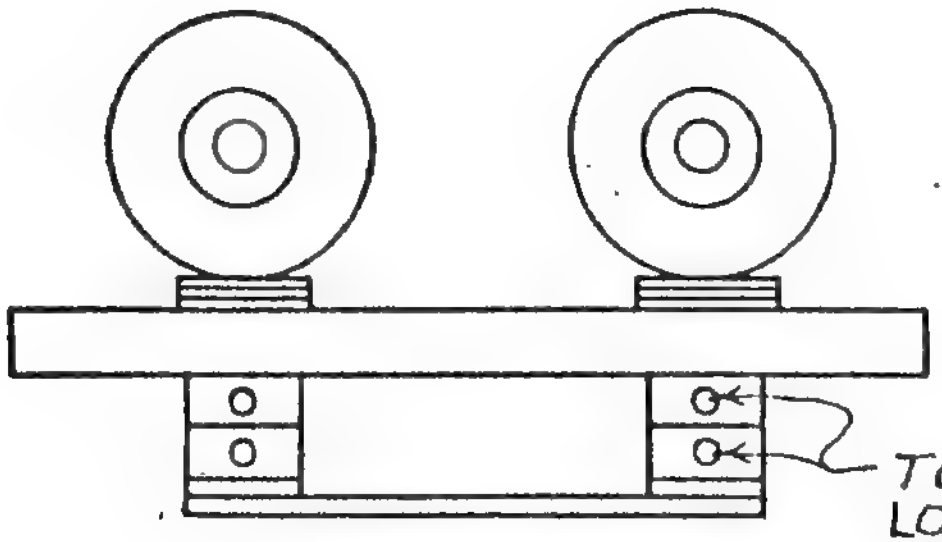

TO ADJUST EYES, LOOSEN THE 2 SHAFT COLLARS INDICATED AND TURN THE EYE

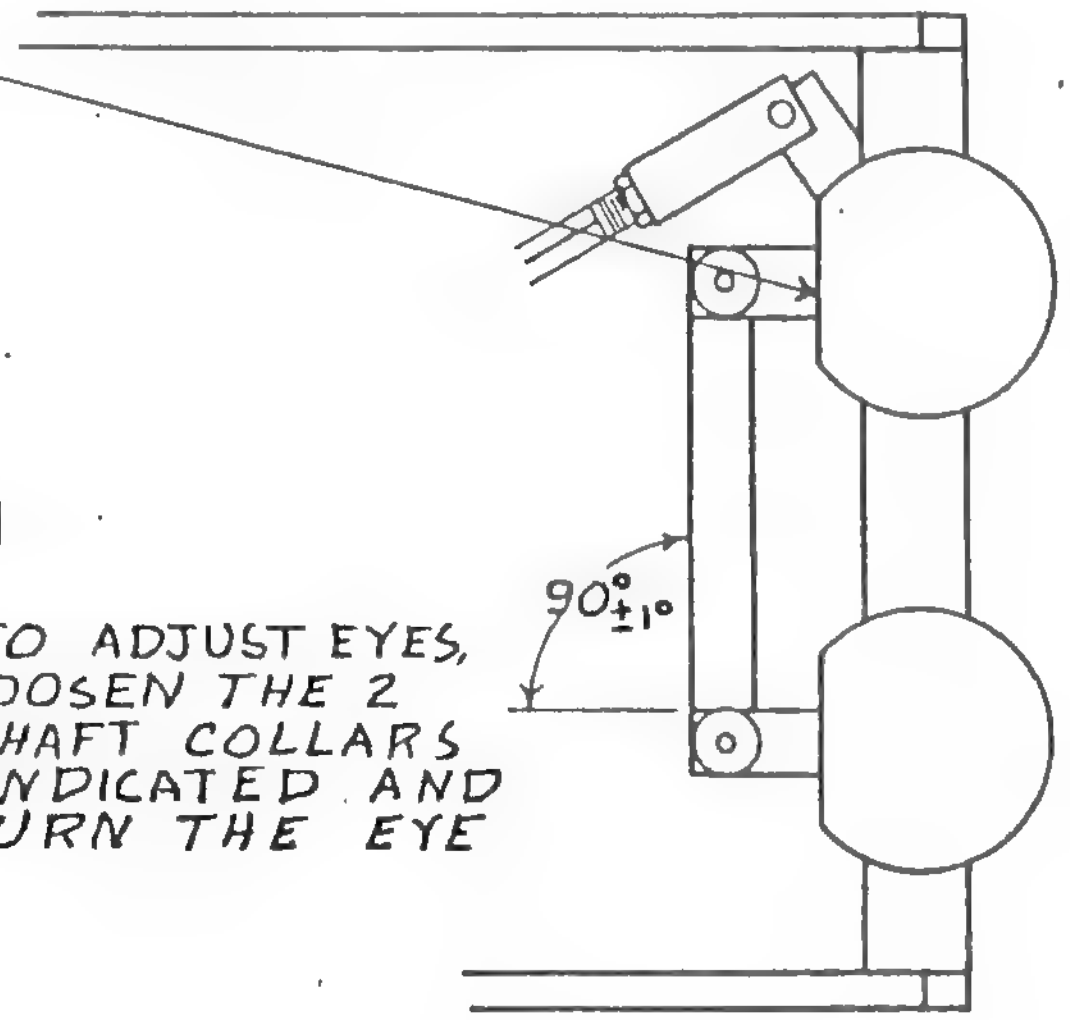

All tol. are Non-accumulative	R. + D. APPROVAL DATE Tim E 7-93	CREATIVE ENGINEERING INC	Property of Creative Engineering, Inc. Reproduction W/O Authorization is strictly prohibited
REVISIONS	PRODUCTION APP. DATE		
REV. | DATE | BY	Q. C. APPROVAL DATE	DEBURR AND BREAK ALL SHARP CORNERS + .010	SCALE: —— DRAWN BY BD
			DATE: 6·22·83 CHK'D. BY
	ITEM: TOP AND FRONT VIEW SHOWING EYES ONLY		~~UNTOLERANCED DIM: FRACT'L ± DECIMAL .xx ± .010 .xxx ± .005~~
	MAT'L:		DRAWING NUMBER 3A

STOCK	MAT'L.

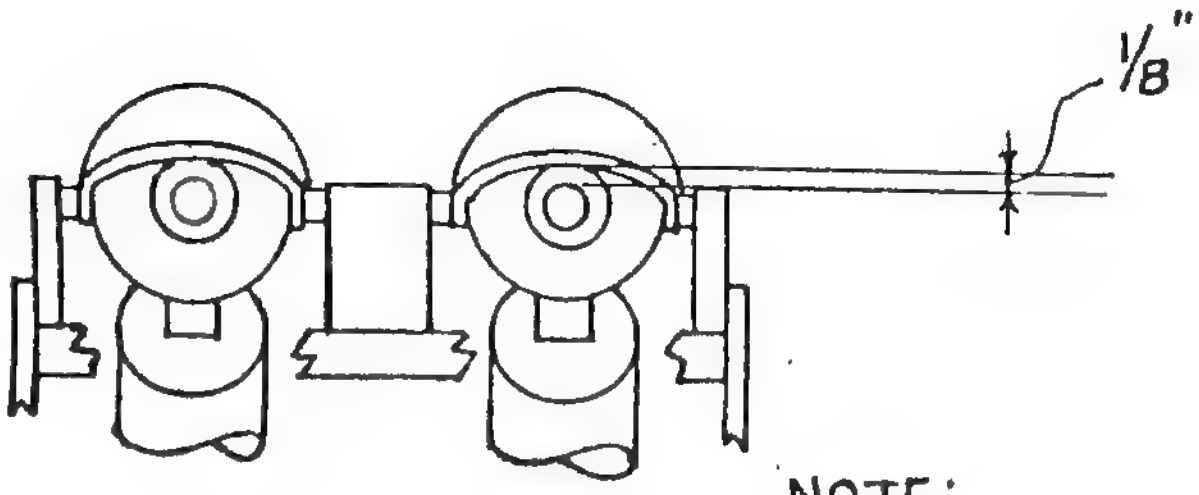

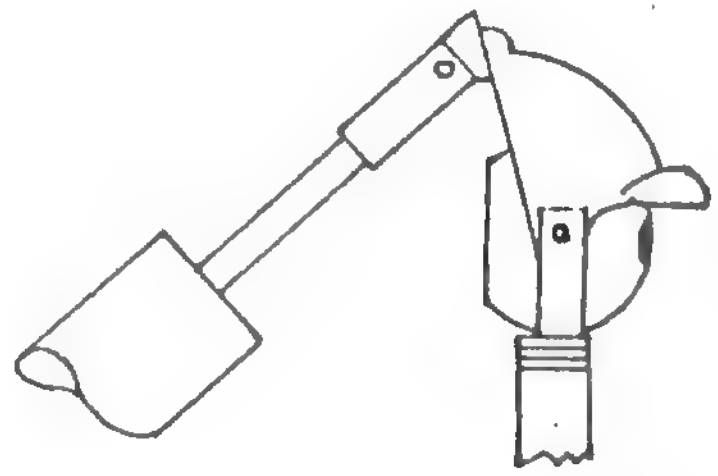

NOTE:
THE EYE LID IS 1/8" ABOVE THE PUPIL WHEN THE FRONT CYLINDER IS OPEN, AND THE REAR CYLINDER IS CLOSED.

All tol. are Non-accumulative	R. D. APPROVAL DATE 7-88	CREATIVE ENGINEERING INC	Property of Creative Engineering, Inc. Reproduction W/O Authorization is strictly prohibited
REVISIONS	PRODUCTION APP. DATE		
REV. / DATE / BY	Q. C. APPROVAL DATE	DEBURR AND BREAK ALL SHARP CORNERS ± .010	SCALE: / DATE: 6-28-83
	ITEM: FRONT AND SIDE VIEW OF EYES		DRAWN BY CARL R / CHK'D. BY
	MAT'L:		~~UNTOLERANCED DIM. FRACT'L. DECIMAL~~ .XX ± .010 .XXX ± .005
			DRAWING NUMBER 4A

STOCK	MAT'L.

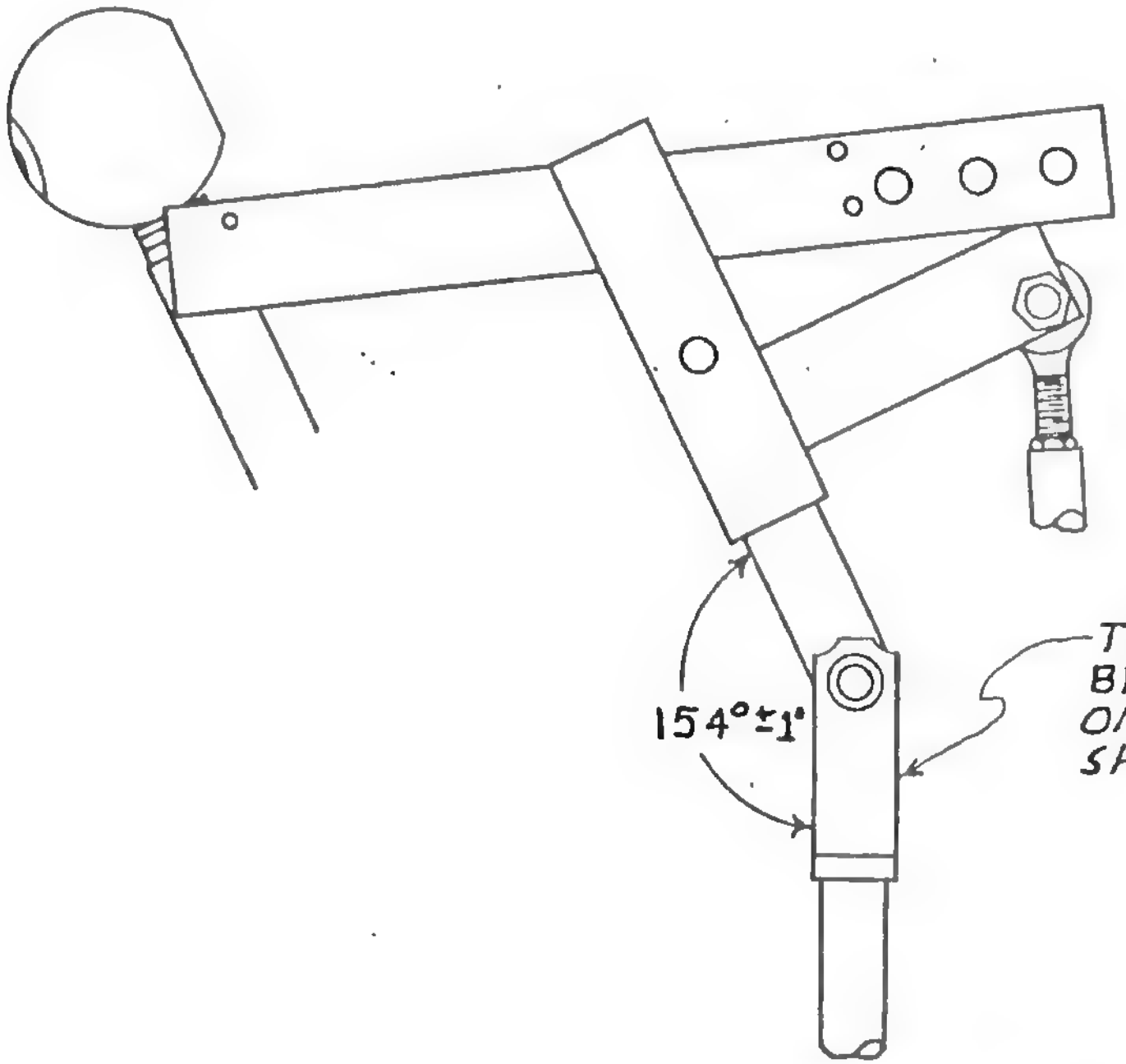

THE ANGLE IS MEASURED BETWEEN THE E-HINGE ON THE TOP OF THE NECK SHAFT AND THE HEAD

All tol. are Non-accumulative	R. I.D. APPROVAL DATE 7-83	CREATIVE ENGINEERING INC	Property of Creative Engineering, Inc. Reproduction W/O Authorization is strictly prohibited
	PRODUCTION APP. DATE		
REVISIONS	Q. C. APPROVAL DATE	DEBURR AND BREAK ALL SHARP CORNERS ↑ .010	SCALE:
REV. DATE BY			DATE: 6·23·83
			DRAWN BY ED
			CHK'D. BY
	ITEM: SIDE VIEW OF HEAD AND UPPER NECK		UNTOLERANCED DIM. FRACT'L. ± 020 DECIMAL .xx ± .010 .xxx ± .005
	MAT'L:		DRAWING NUMBER 5

STOCK	MAT'L

WITH BOTH CYLINDERS IN THE FULLY CLOSED POSITION. THE HEAD WILL BE SQUARE WITH THE SHOULDER BAR

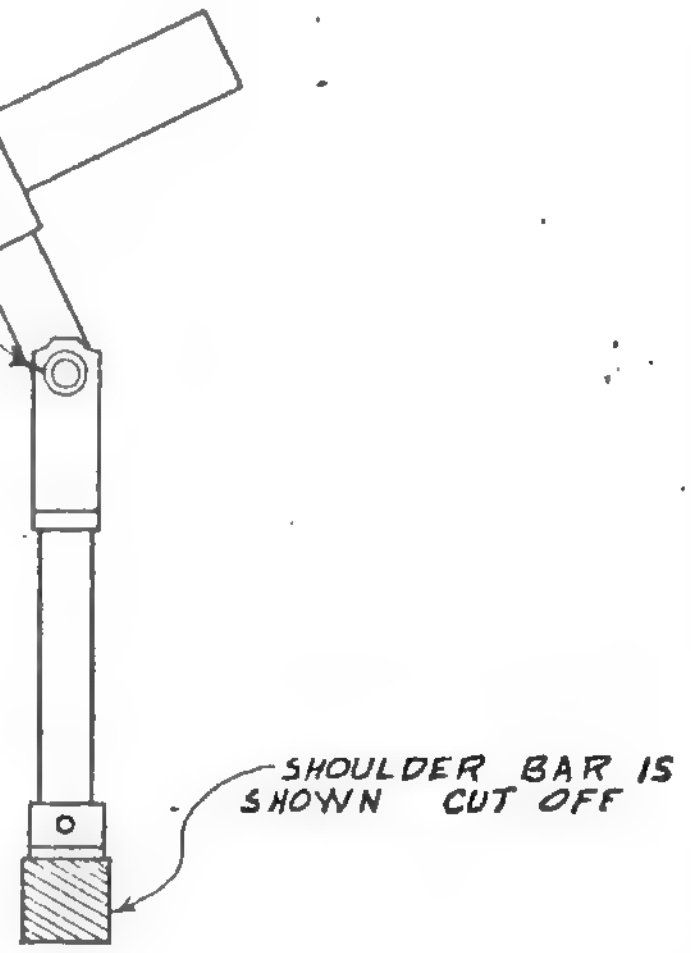

ANGLE IS MEASURED BETWEEN REAR MOUNT AND THE CHEST FRAME

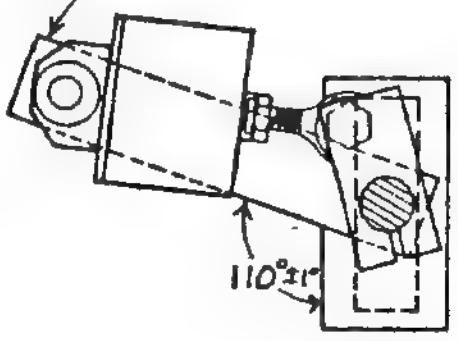

TOP VIEW
HEAD RIGHT ONLY

SET THIS CYLINDER USING THE PIN to PIN DIM.

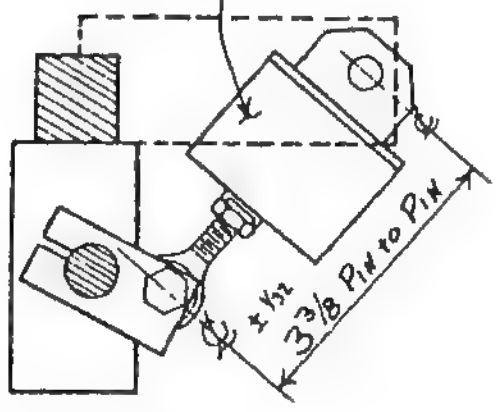

BOTTOM VIEW
HEAD LEFT ONLY

All tol are Non-accumulative	R&D APPROVAL DATE	CREATIVE ENGINEERING, INC.
	PRODUCTION APP DATE	
REVISIONS: REV / DATE / BY	Q C APPROVAL DATE	DEBURR AND BREAK ALL SHARP CORNERS .010
		SCALE: ——
		DATE 6 23 83
		DRAWN BY BD
		CHK'D BY
ITEM: ADJUSTMENT OF HEAD LEFT, RIGHT CYLINDERS		UNTOLERANCED DIM. PROPERTY DECIMALS .XX ±.010 .XXX ±.005
MAT'L		DRAWING NUMBER 6A

STOCK	MAT'L.

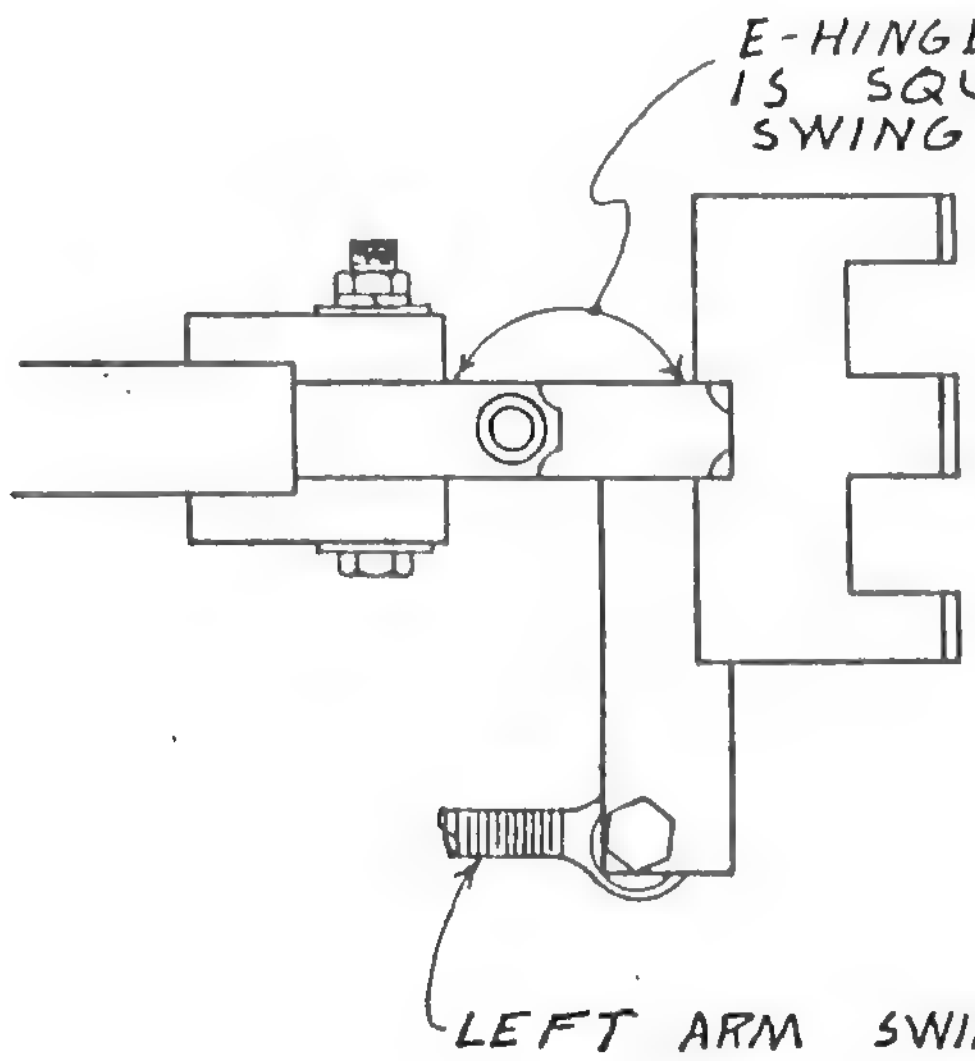

All tol. are Non-accumulative	R. + D. APPROVAL DATE 7-83	CREATIVE ENGINEERING INC	Property of Creative Engineering, Inc. Reproduction W/O Authorization is strictly prohibited
REVISIONS	PRODUCTION APP. DATE	DEBURR AND BREAK ALL SHARP CORNERS ± .010	SCALE:
REV. | DATE | BY	Q. C. APPROVAL DATE	DATE: 6·23·83	DRAWN BY ED
	ITEM: TOP VIEW SHOWING ARM SWING ONLY		CHK'D. BY
	MAT'L:		~~UNTOLERANCED DIM.~~ ~~FRACT'L.~~ ~~DECIMAL~~ ~~.xx ± .010~~ ~~± 020~~ ~~.xxx ± .005~~
			DRAWING NUMBER 7A

STOCK	MAT'L.

A PROTRACTOR IS REQUIRED FOR CRITICAL ADJUSTMENTS THE PROTRACTOR IS DRAWN OFF THE SIDE OF THE HINGE FOR PICTURE CLARITY

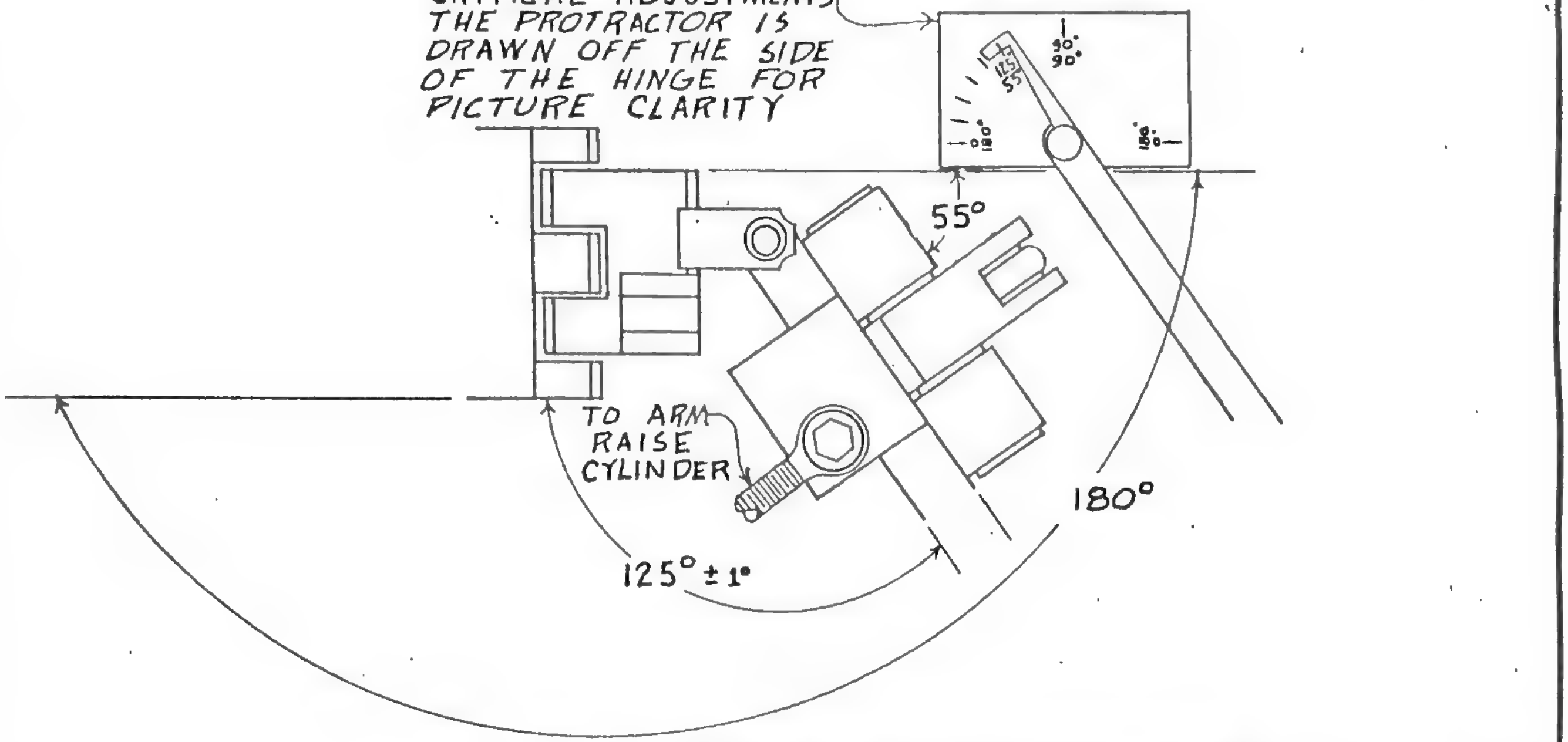

All tol. are Non-accumulative	R. + D. APPROVAL DATE 5-2 7/83	CREATIVE ENGINEERING INC	Property of Creative Engineering, Inc. Reproduction W/O Authorization is strictly prohibited
REVISIONS	PRODUCTION APP. DATE	DEBURR AND BREAK ALL SHARP CORNERS .010	SCALE:
REV. DATE BY	Q. C. APPROVAL DATE	DATE: 6·23·83	DRAWN BY BD
	ITEM: SIDE VIEW SHOWING ARM RAISE HINGE		CHK'D. BY
	MAT'L:		~~UNTOLERANCED DIM.~~ ~~FRACTL.~~ ~~DECIMAL~~ ~~.010~~ ~~.005~~
			DRAWING NUMBER 8

STOCK	MAT'L.

BOTTOM VIEW OF THE SHOULDER HINGE SHOWING THE UPPER ARM BOX CUT OFF

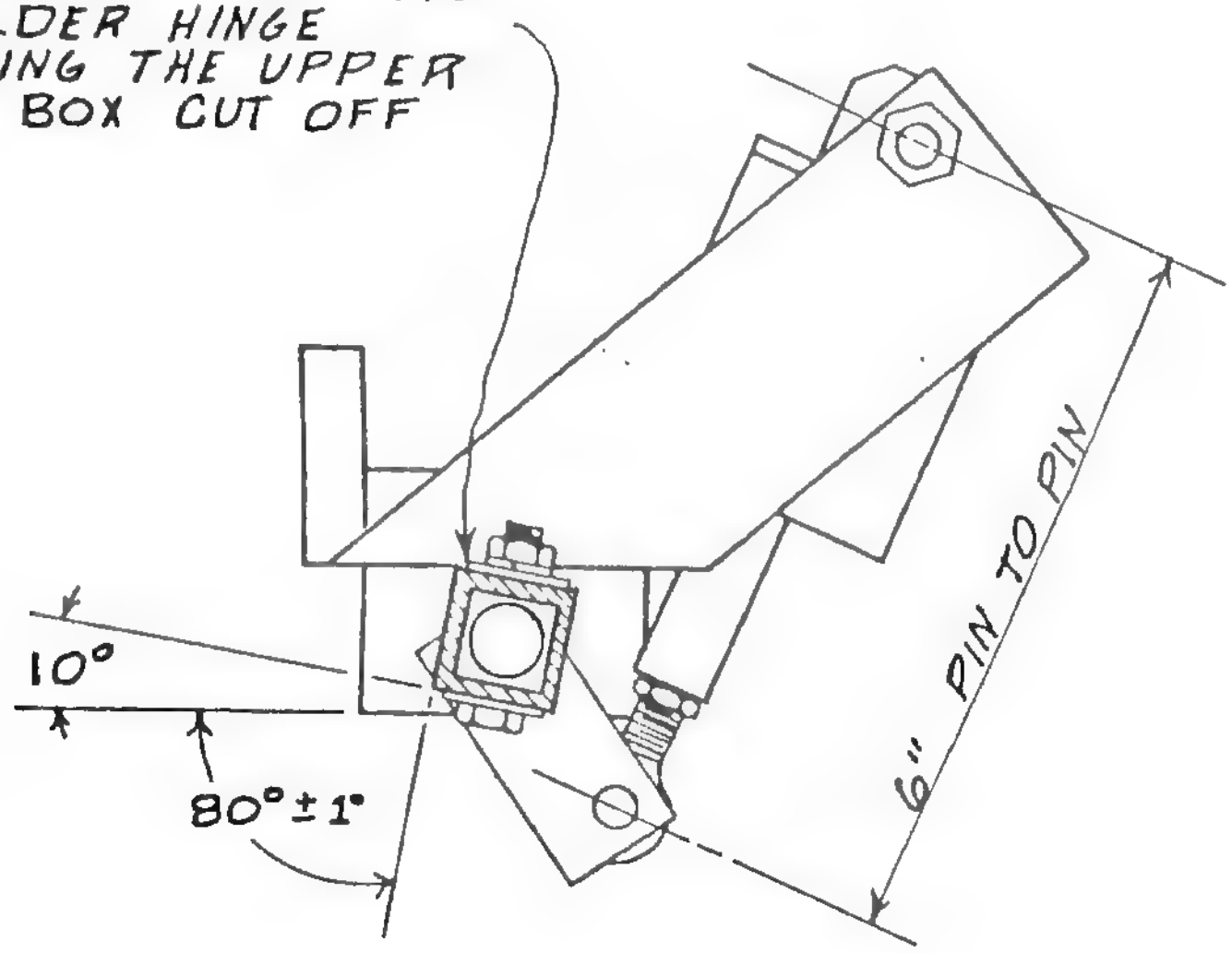

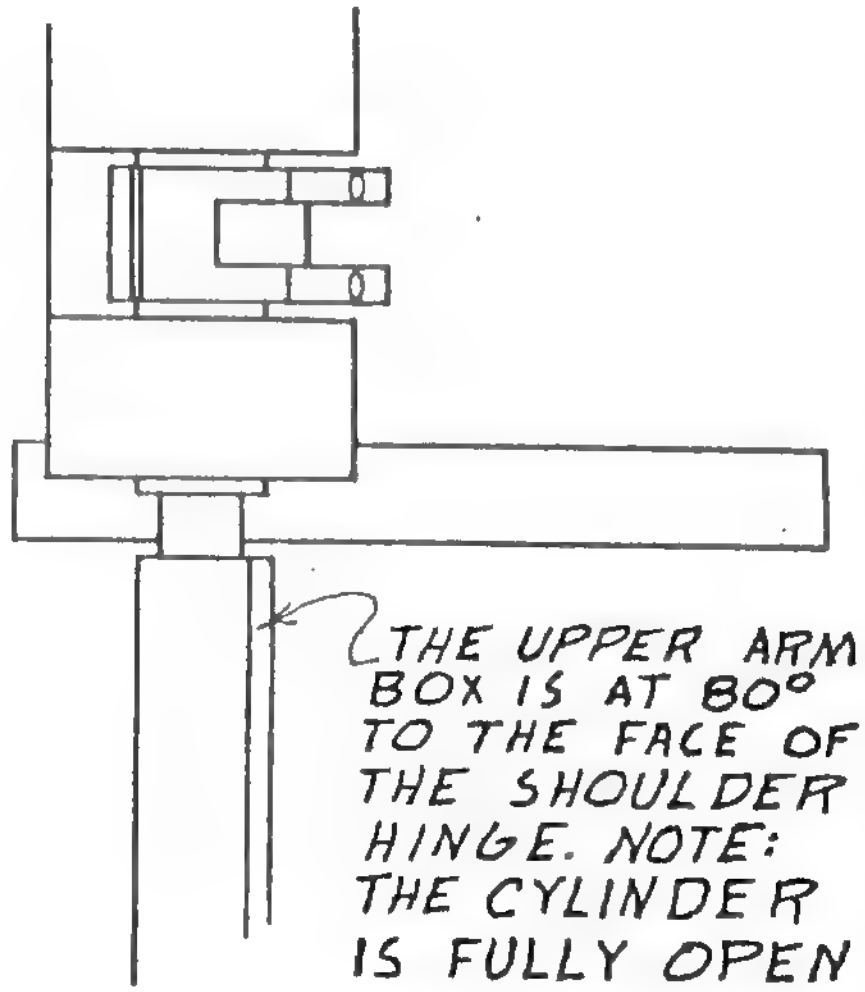

All tol. are Non-accumulative	R. I D.-APPROVAL DATE 7-8-83	CREATIVE ENGINEERING INC	Property of Creative Engineering, Inc. Reproduction W/O Authorization is strictly prohibited.
	PRODUCTION APP. DATE		
REVISIONS	Q C. APPROVAL DATE	DEBURR AND BREAK ALL SHARP CORNERS .010	SCALE: — / DRAWN BY EP
REV. / DATE / BY		DATE: 6-24-83	CHK'D. BY
	ITEM: ADJUSTMENT FOR LEFT SHOULDER TWIST		~~UNTOLERANCED DIM. FRACT'L. DECIMAL .XX ± .010 .XXX ± .005~~
	MAT'L:		DRAWING NUMBER 9A

STOCK	MAT'L.

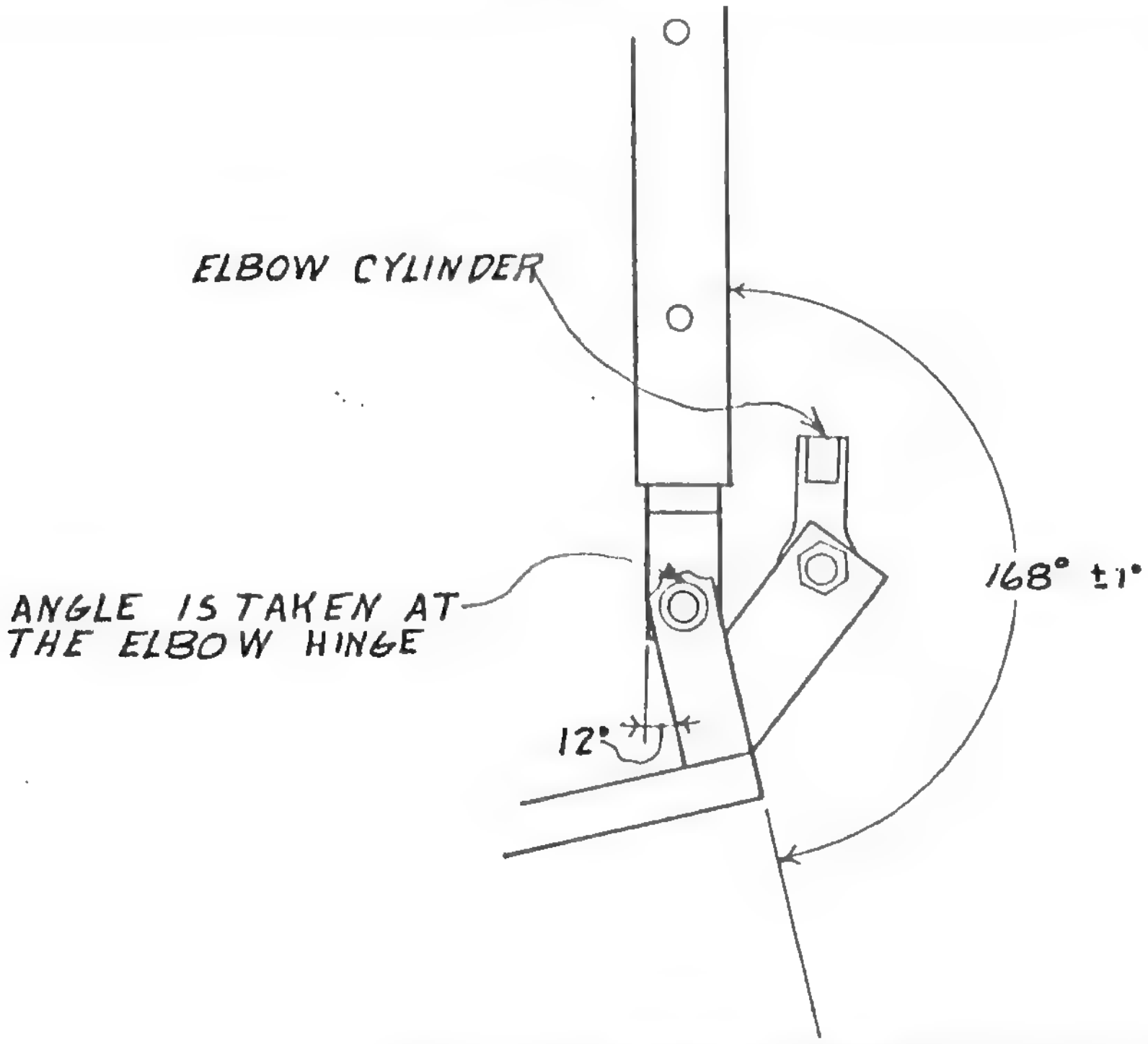

All tol. are Non-accumulative	R. + D. APPROVAL DATE 7/83	CREATIVE ENGINEERING INC	Property of Creative Engineering, Inc. Reproduction W/O Authorization is strictly prohibited.
REVISIONS	PRODUCTION APP. DATE	DEBURR AND BREAK ALL SHARP CORNERS + .010	SCALE:
REV. | DATE | BY	Q. C. APPROVAL DATE		DATE: 6·28·83
	ITEM: SIDE VIEW LEFT ELBOW HINGE		DRAWN BY ED
	MAT'L:		CHK'D. BY
			~~UNTOLERANCED DIM. FRACT'L. DECIMAL .xx ± .010 .xxx ± .005~~
			DRAWING NUMBER 10

STOCK	MAT'L.

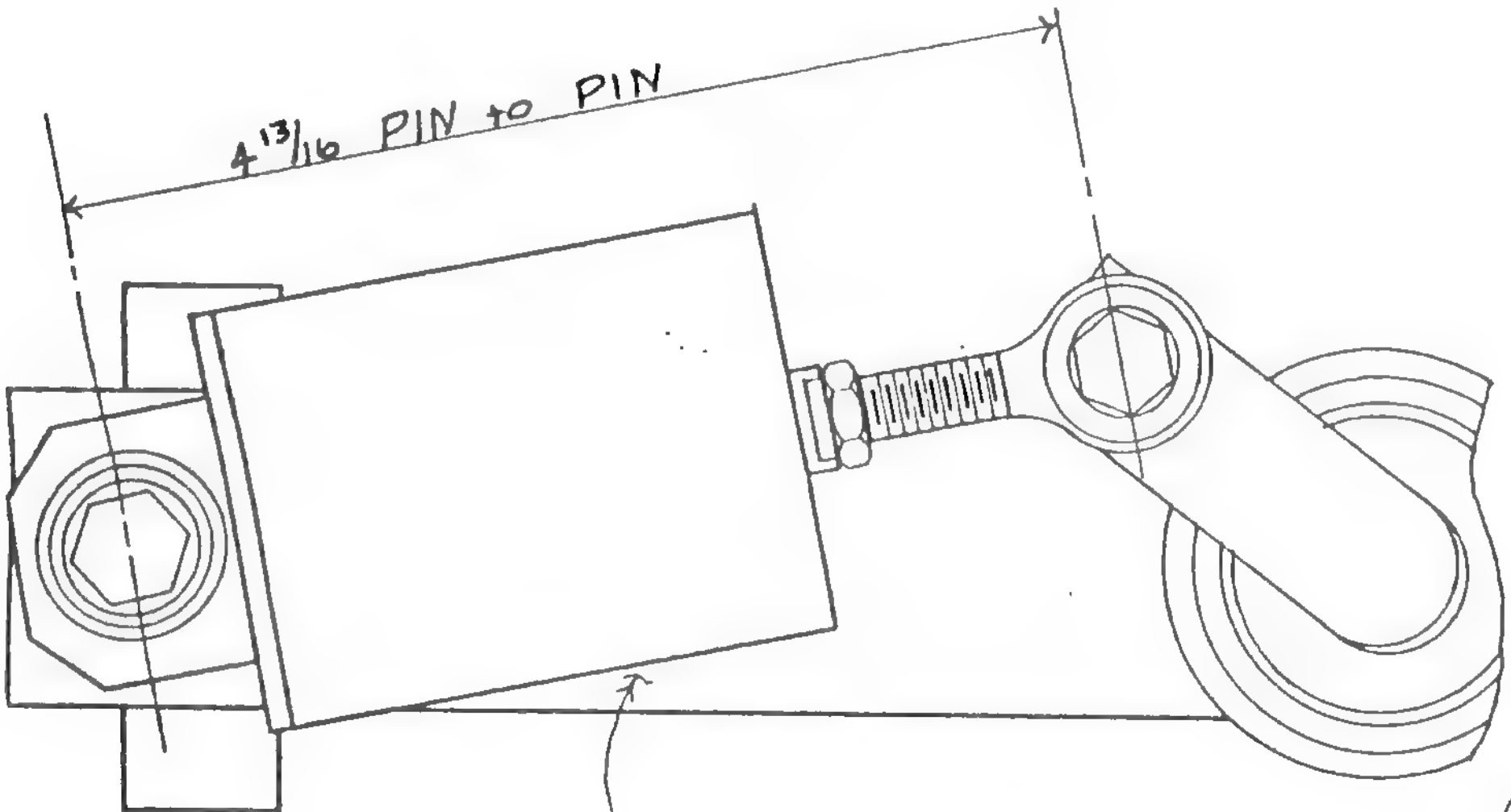

BOTTOM VIEW OF THE LOWER LEFT ARM

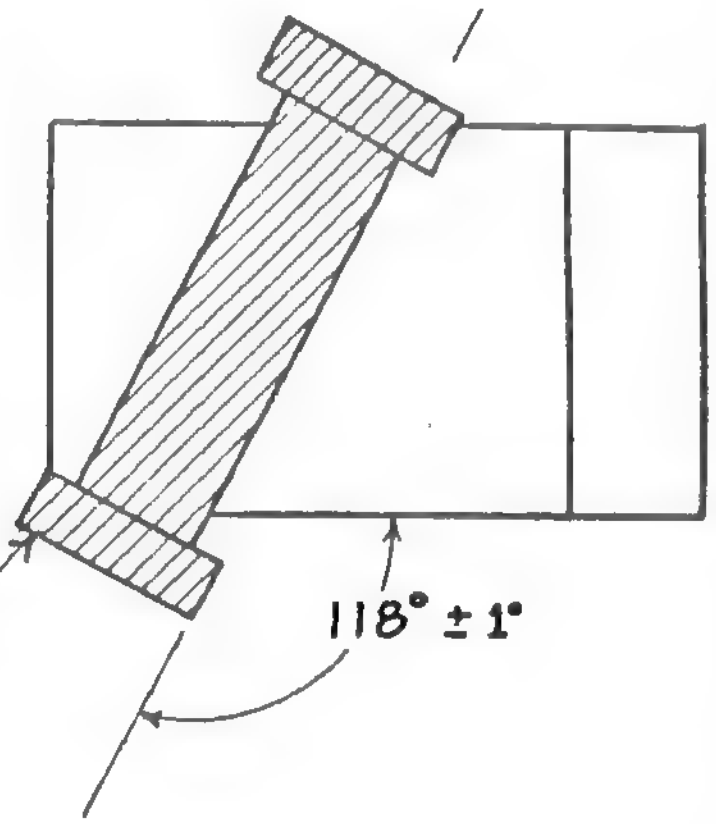

END VIEW FACING THE WRIST THE HAND IS SHOWN CUT OFF

All tol. are Non-accumulative	R. I D APPROVAL DATE 7/83	CREATIVE ENGINEERING INC	Property of Creative Engineering, Inc. Reproduction W/O Authorization is strictly prohibited.
REVISIONS	PRODUCTION APP. DATE	DEBURR AND BREAK ALL SHARP CORNERS .010	SCALE:
REV. | DATE | BY	Q C. APPROVAL DATE		DATE: 7·6·83
	ITEM: ADJUSTMENT FOR WRIST TWIST MECH.		DRAWN BY ED
	MAT'L:		CHK'D. BY
			~~UNTOLERANCED DIM.~~ ~~FRACTL~~ ~~DECIMAL~~ .xx ± .010 ~~± 000~~ .xxx ± .005
			DRAWING NUMBER 11 A

STOCK	MAT'L.

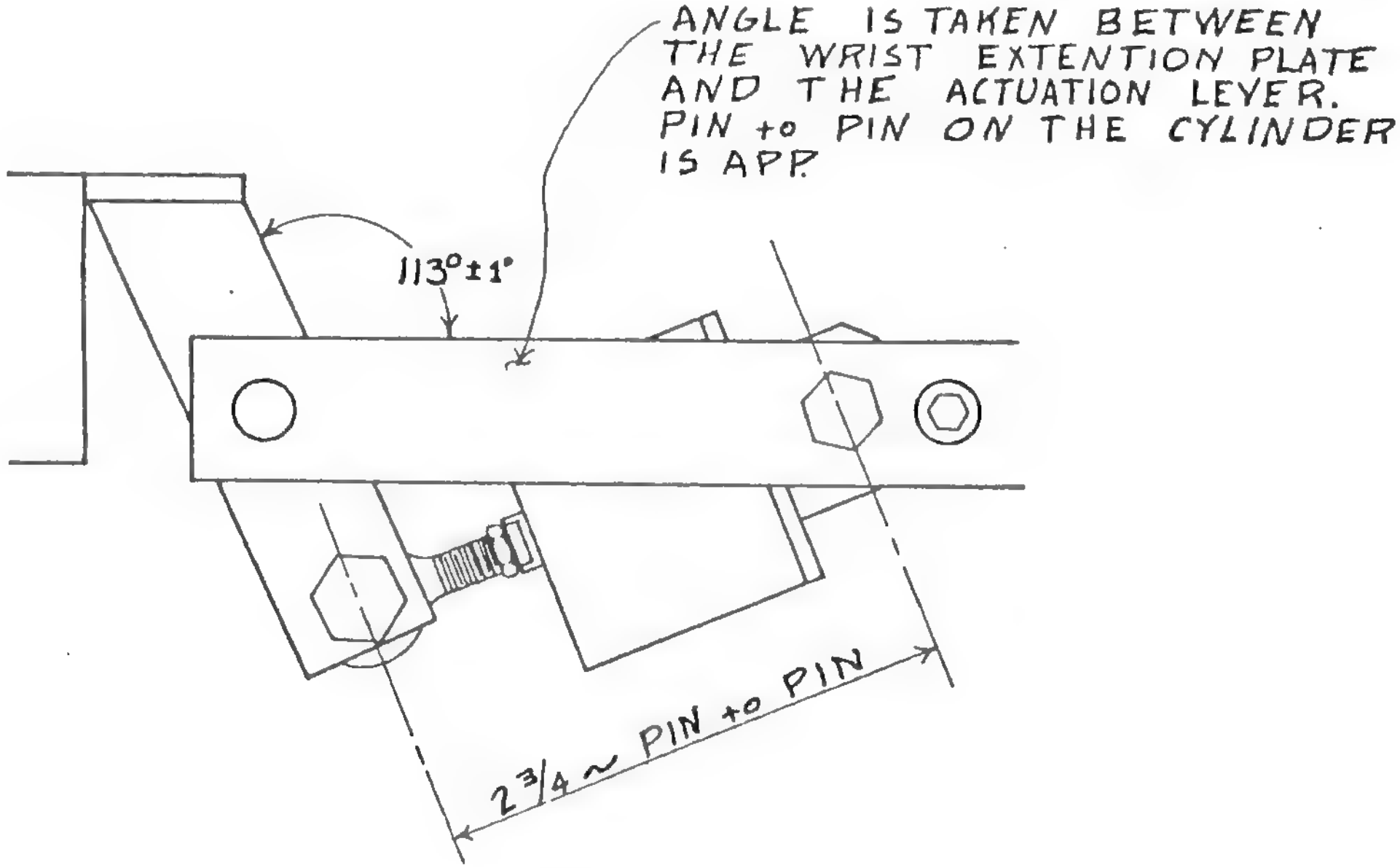

All tol. are Non-accumulative	R & D APPROVAL DATE 7/83	CREATIVE ENGINEERING INC	Property of Creative Engineering, Inc. Reproduction W/O Authorization is strictly prohibited.
REVISIONS	PRODUCTION APP. DATE		
REV | DATE | BY	Q C APPROVAL DATE	DEBURR AND BREAK ALL SHARP CORNERS .010	SCALE: / DRAWN BY
			DATE: 6·23·83 / CHK'D BY
	ITEM: SIDE VIEW LEFT WRIST BEND MECHANISM		~~UNTOLERANCED DIM. FRACT'L. DECIMAL .010 .005~~
	MAT'L:		DRAWING NUMBER 12

STOCK	MAT'L.

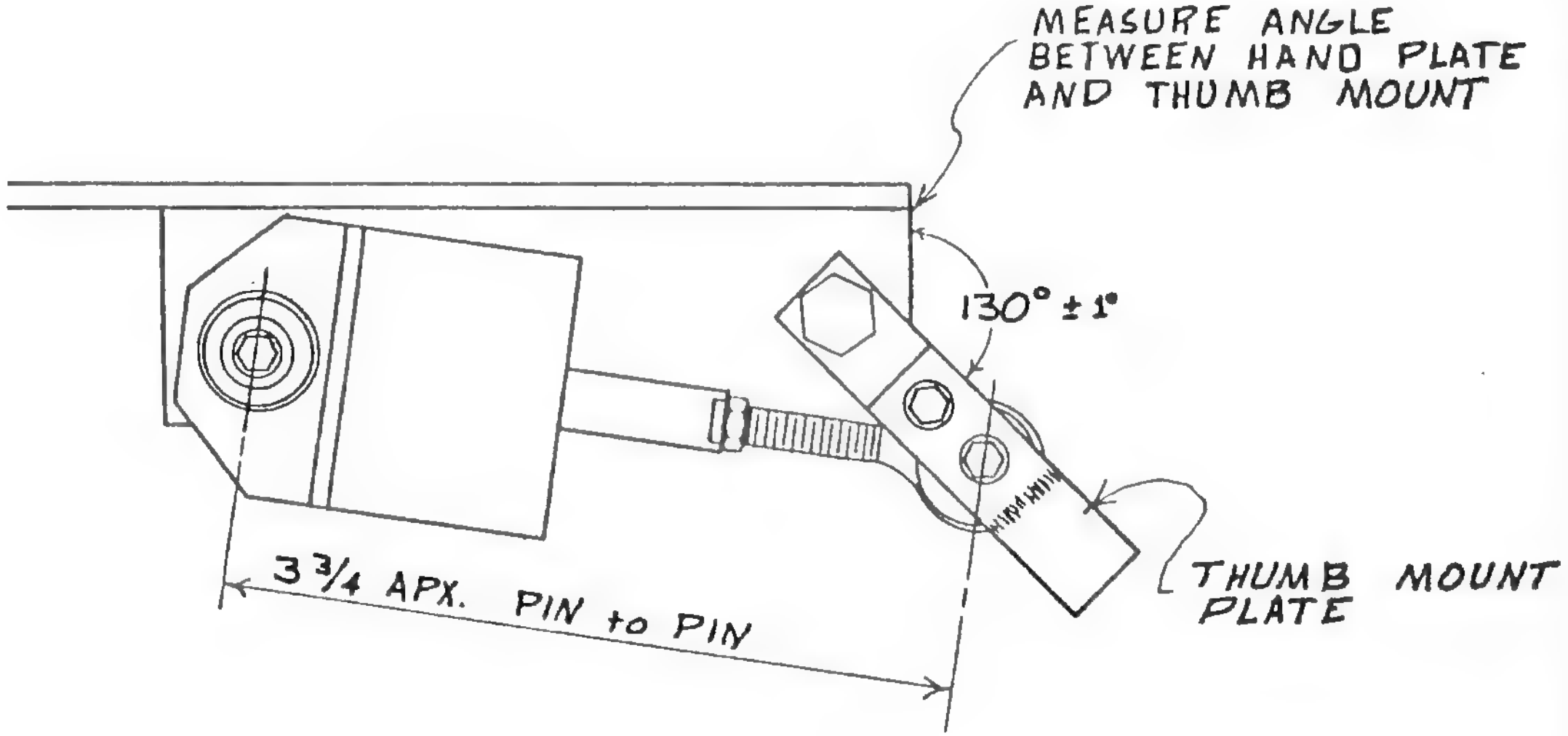

All lol. are Non-accumulative	R. I D. APPROVAL DATE 7/83	CREATIVE ENGINEERING INC	Property of Creative Engineering, Inc. Reproduction W/O Authorization is strictly prohibited
REVISIONS	PRODUCTION APP. DATE		
REV | DATE | BY	Q C. APPROVAL DATE	DEBURR AND BREAK ALL SHARP CORNERS .010	SCALE: DATE: 6·23·83
	ITEM: SIDE VIEW LEFT THUMB MECH.		DRAWN BY BD
	MAT'L:		CHK'D. BY
			~~UNTOLERANCED DIM. FRACT'L. DECIMAL .xxx ± .010 .xx ± .020 .xxx ± .005~~
			DRAWING NUMBER 13

STOCK	MAT'L.

MEASURE THE ANGLE AT THE SHOULDER HINGE

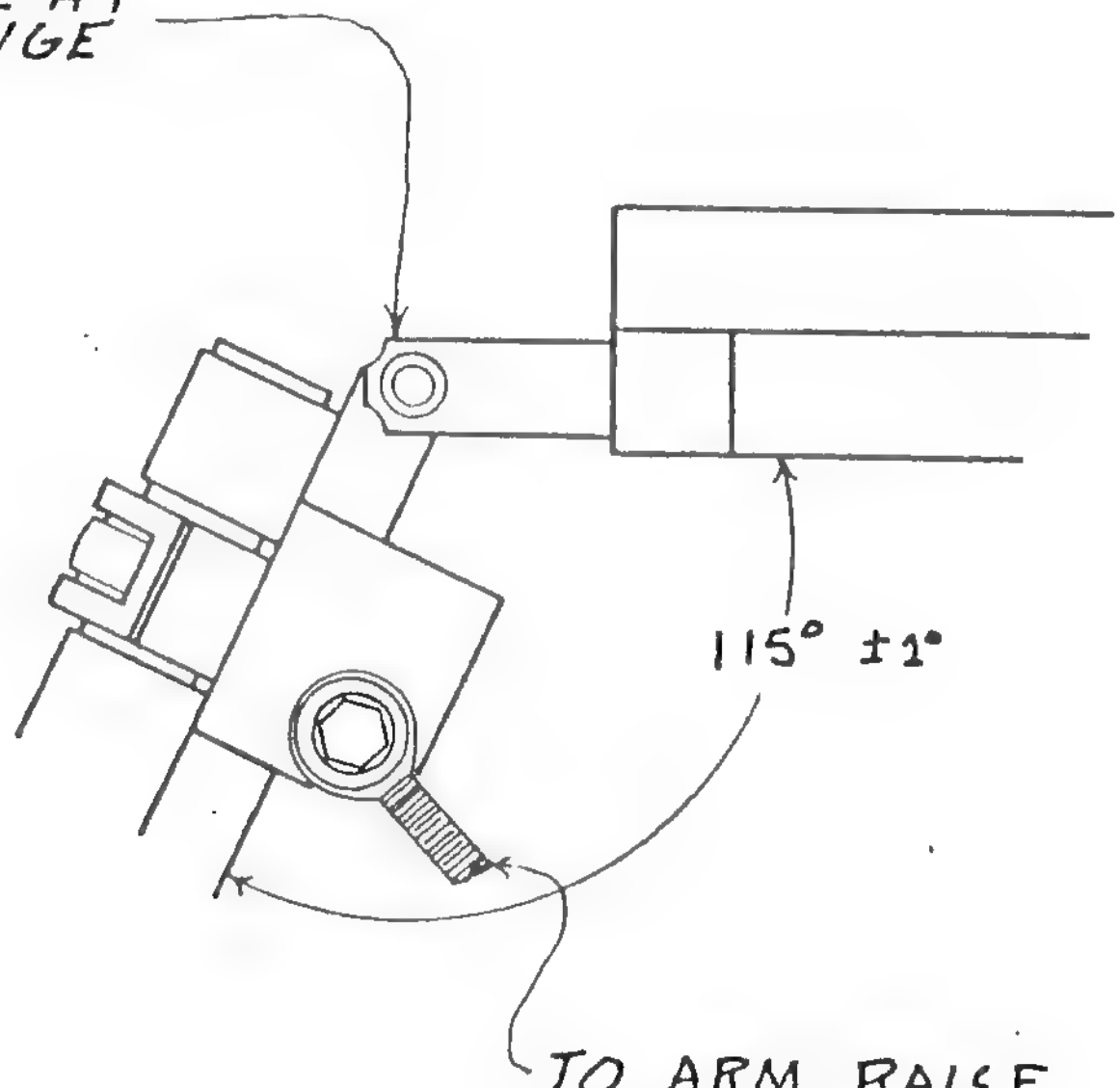

TO ARM RAISE CYLINDER

All tol. are Non-accumulative	R & D. APPROVAL DATE 7/83	CREATIVE ENGINEERING INC	Property of Creative Engineering, Inc Reproduction W/O Authorization is strictly prohibited
REVISIONS	PRODUCTION APP. DATE		
REV. / DATE / BY	Q C. APPROVAL DATE	DEBURR AND BREAK ALL SHARP CORNERS ± .010	SCALE: / DRAWN BY BD
			DATE: 6·27·83 / CHK'D BY
	ITEM: SIDE VIEW RIGHT SHOULDER, ARM RAISE		~~UNTOLERANCED DIM. FRACT'L. DECIMAL .060 .000 .005~~
	MAT'L:		DRAWING NUMBER A

STOCK	MAT'L.

BOTTOM VIEW OF SHOULDER HINGE SHOWING THE ARM BOX CUT OFF

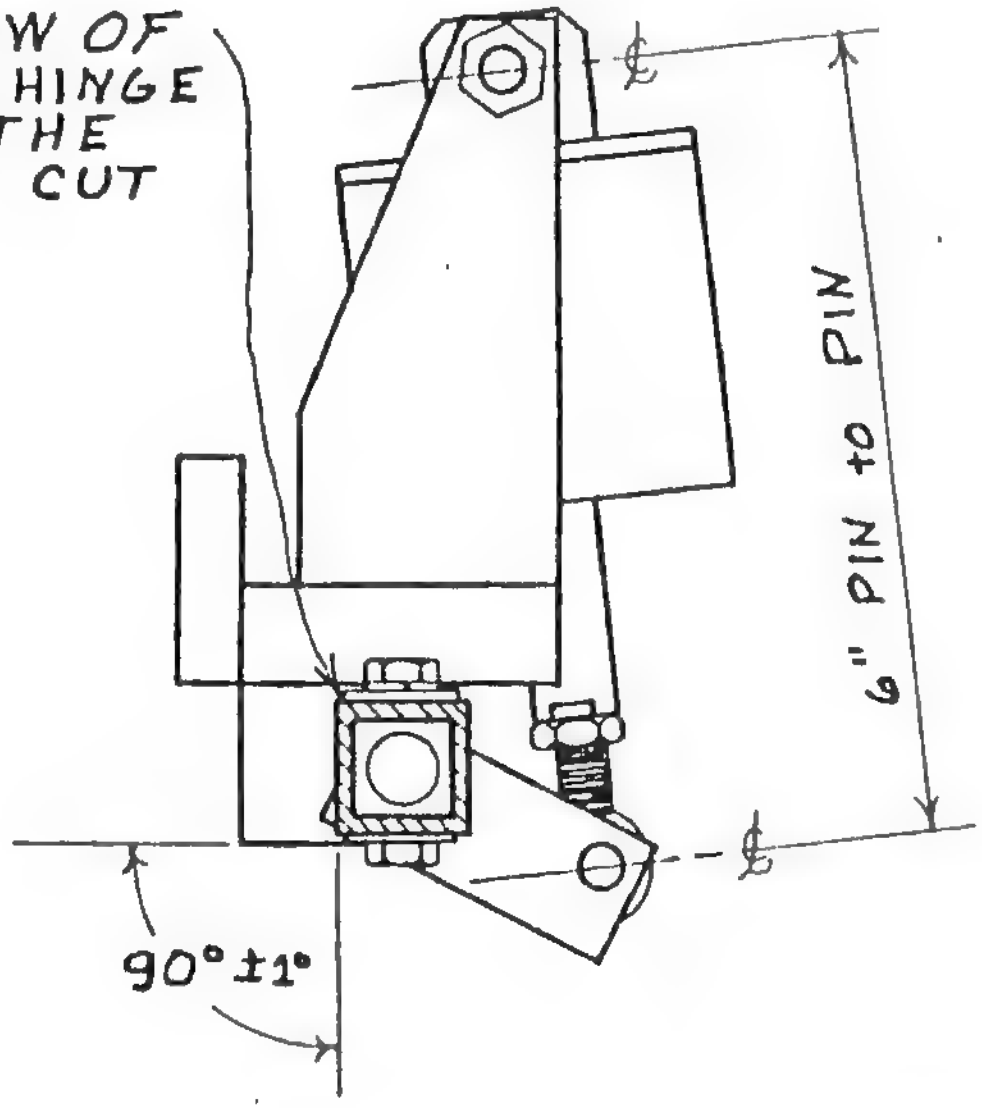

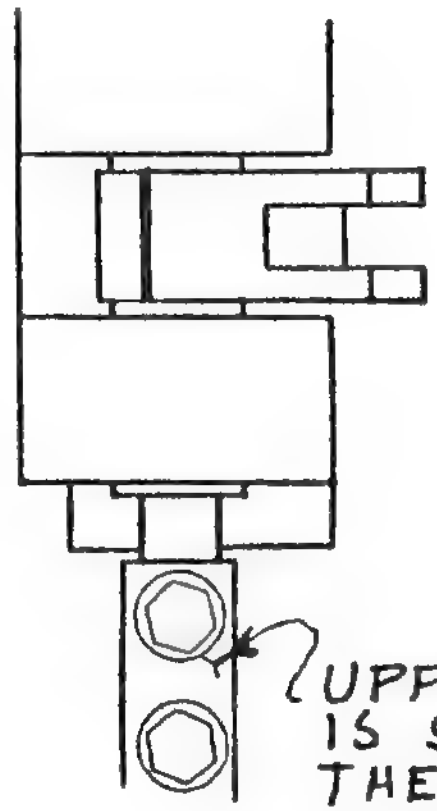

UPPER ARM BOX IS SQUARE WITH THE FACE OF THE SHOULDER HINGE. CYLINDER IS FULLY OPEN

All tol. are Non-accumulative	R. & D. APPROVAL DATE 2/85	CREATIVE ENGINEERING INC	Property of Creative Engineering, Inc. Reproduction W/O Authorization is strictly prohibited
	PRODUCTION APP. DATE		
REVISIONS	Q. C APPROVAL DATE	DEBURR AND BREAK ALL SHARP CORNERS ± .010	SCALE: — DRAWN BY BD
REV / DATE / BY			DATE: 6-27-83 CHK'D. BY
	ITEM: ADJUSTMENT FOR RIGHT ARM TWIST		~~UNTOLERANCED DIM~~ ~~FRACT'L~~ ~~DECIMAL~~ ~~.XX ± .010~~ ~~± .030~~ ~~.XXX ± .005~~
	MAT'L:		DRAWING NUMBER 1 / 4

STOCK	MAT'L.

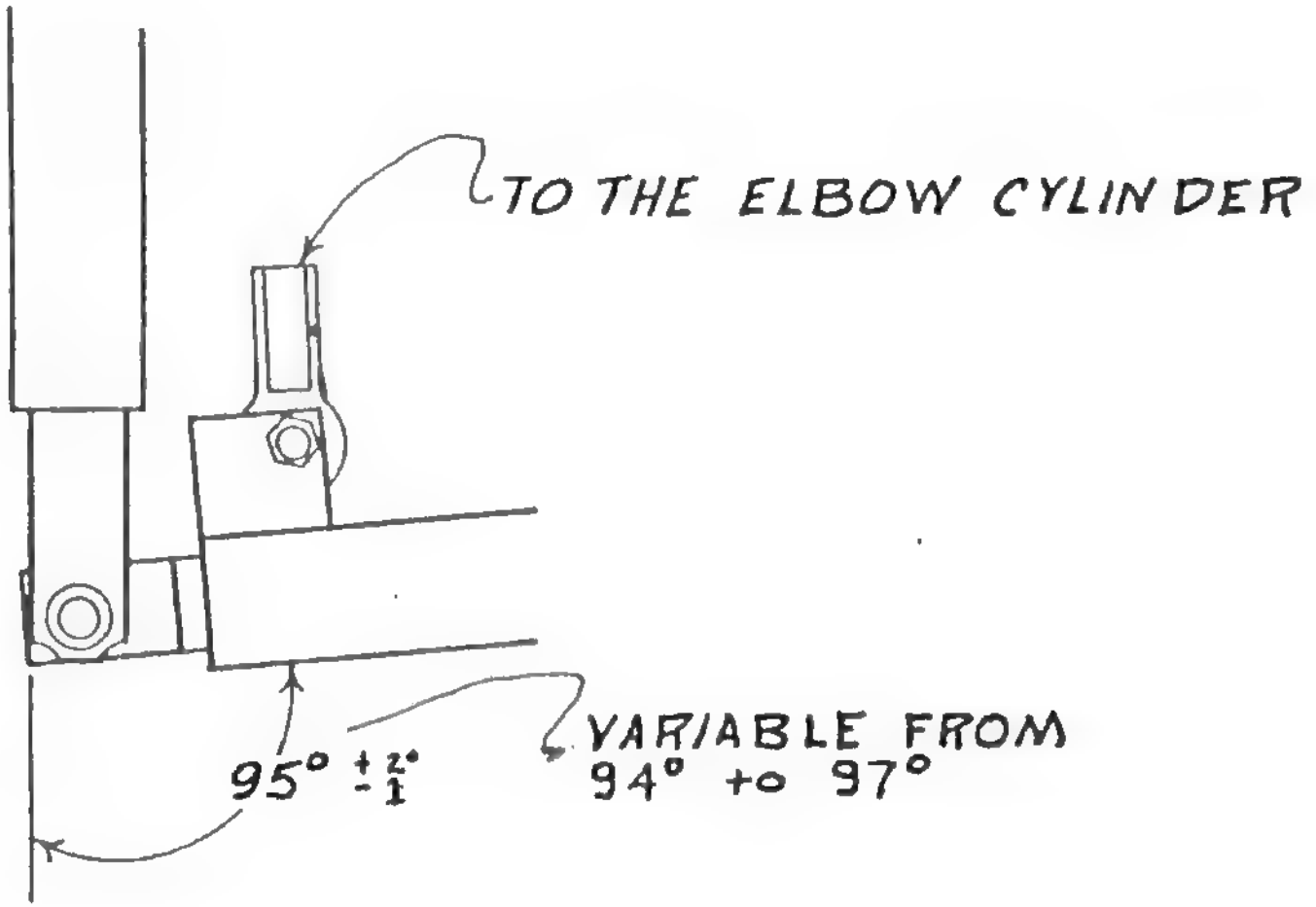

All tol. are Non-accumulative

REVISIONS		
REV	DATE	BY

R. I D APPROVAL DATE 7/85

PRODUCTION APP. DATE

Q C. APPROVAL DATE

CREATIVE ENGINEERING INC

Property of Creative Engineering, Inc. Reproduction W/O Authorization is strictly prohibited.

DEBURR AND BREAK ALL SHARP CORNERS .010

SCALE:

DATE: 6·27·83

DRAWN BY BD

CHK'D BY

ITEM: SIDE VIEW RIGHT ELBOW HINGE

~~UNTOLERANCED DIM.~~
~~FRACTL. DECIMAL~~
~~.xx ± .010~~
~~.000 .xxx ± .005~~

MAT'L:

DRAWING NUMBER 1 A

STOCK	MAT'L.

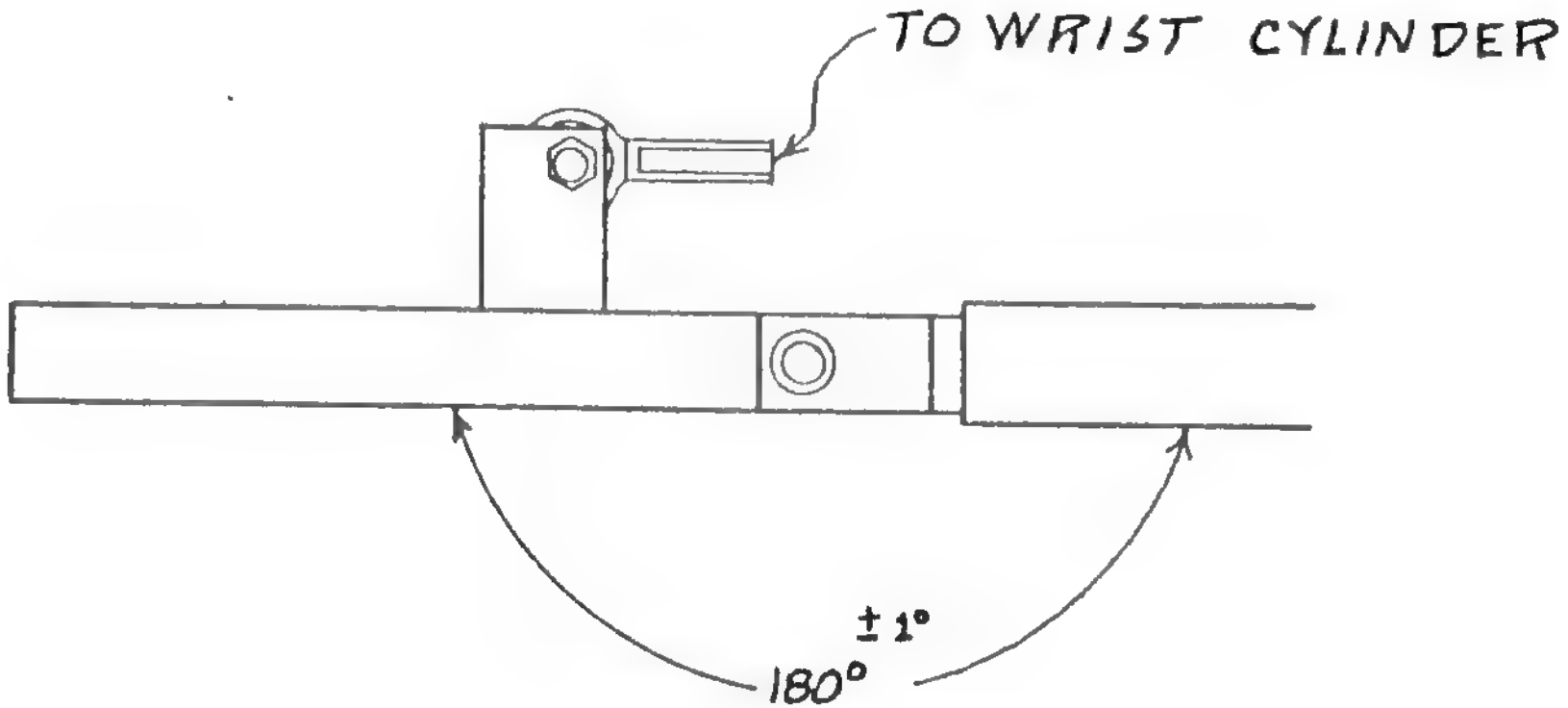

All tol are Non-accumulative	R. I D APPROVAL DATE	CREATIVE ENGINEERING INC	Property of Creative Engineering, Inc. Reproduction W/O Authorization is strictly prohibited
	PRODUCTION APP. DATE		
REVISIONS	Q. C. APPROVAL DATE	DEBURR AND BREAK ALL SHARP CORNERS .010	SCALE: —— DRAWN BY BD
REV | DATE | BY			DATE: 6·27·83 CHK'D. BY
	ITEM: RIGHT WRIST HINGE SIDE VIEW		~~UNTOLERANCED DIM. FRACT'L. DECIMAL .010 .005~~
	MAT'L:		DRAWING NUMBER A

STOCK	MAT'L.

ANGLE OF ACTUATION LEVER
TO FOOT MOUNT PLATE

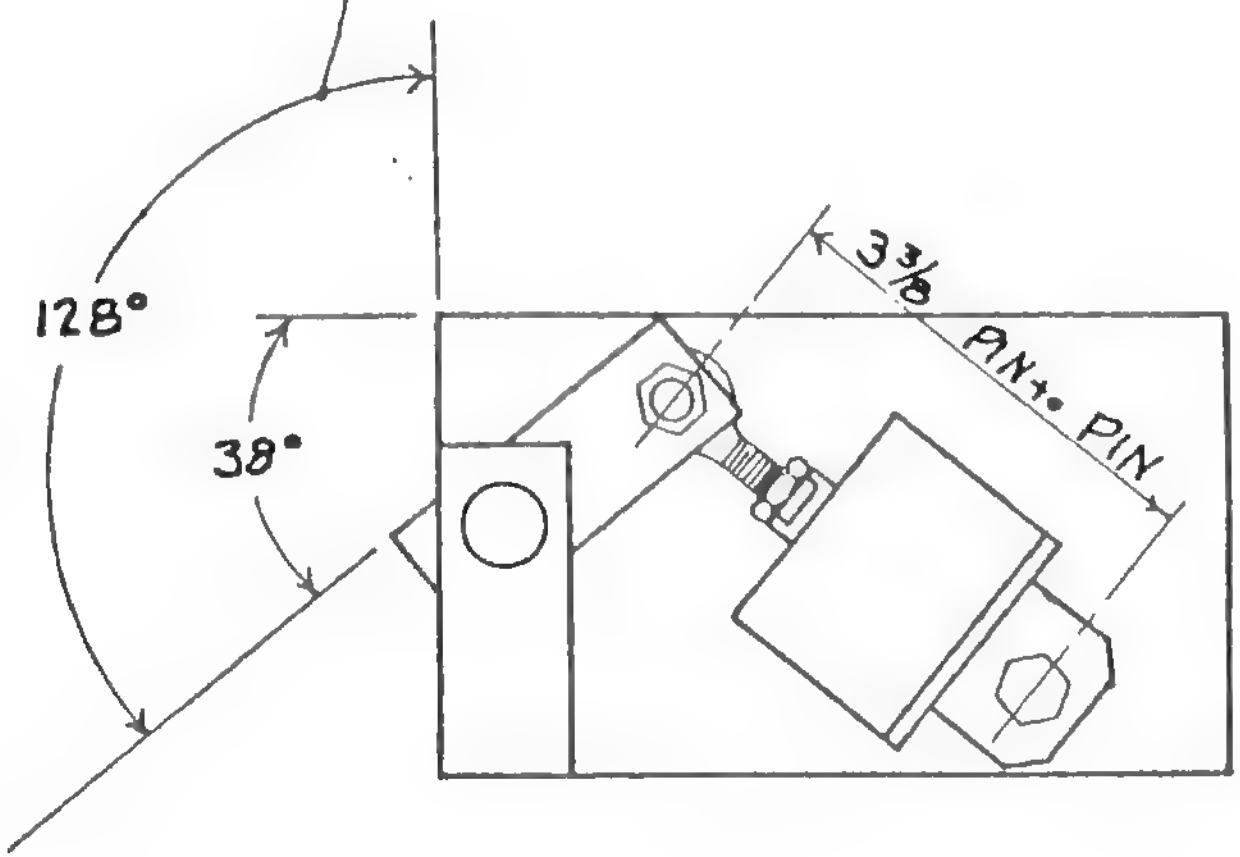

All tol. are Non-accumulative	R + D. APPROVAL DATE 7/85	CREATIVE ENGINEERING INC	Property of Creative Engineering, Inc. Reproduction W/O Authorization is strictly prohibited
REVISIONS	PRODUCTION APP. DATE		
REV | DATE | BY	Q C. APPROVAL DATE	DEBURR AND BREAK ALL SHARP CORNERS .010	SCALE: / DRAWN BY ED
		DATE: 6·27·83	CHK'D. BY
	ITEM: TOP VIEW KLUNK FOOT WIGGLE		~~UNTOLERANCED DIM: FRACT'L. DECIMAL .xx ± .010 .xxx ± .005 ± .030~~
	MAT'L:		DRAWING NUMBER 18

STOCK	MAT'L.

WITH THE REAR CYLINDER OPEN AND THE FRONT CLOSED THE ACTUATION LEVER AND UPPER CHAIR MOUNT PLATES ARE SQUARE WITH THE STAGE MOUNT PLATE

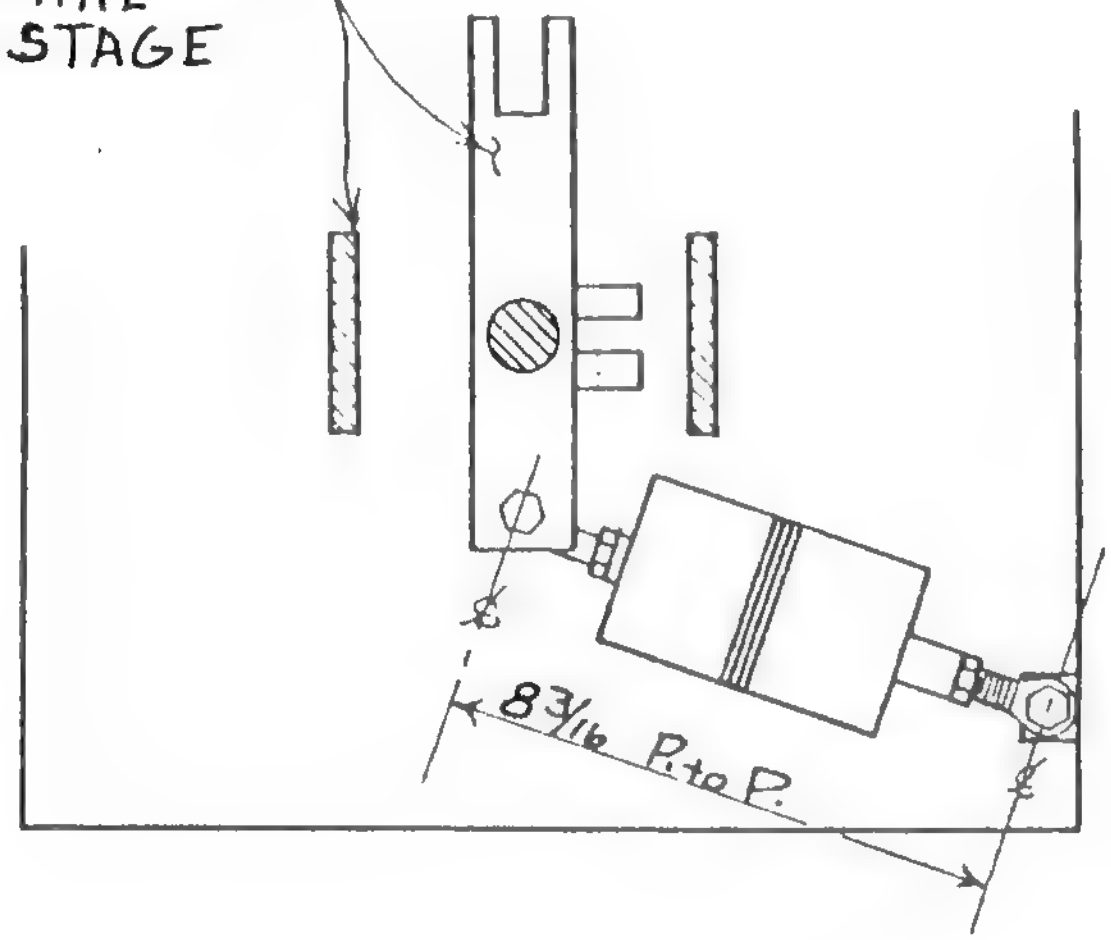

All tol. are Non-accumulative

REVISIONS		
REV	DATE	BY

R. I. D. APPROVAL DATE 7/83

PRODUCTION APP. DATE

Q. C. APPROVAL DATE

DEBURR AND BREAK ALL SHARP CORNERS .010

CREATIVE ENGINEERING INC

Property of Creative Engineering, Inc. Reproduction W/O Authorization is strictly prohibited

SCALE:

DATE: 6·27·83

DRAWN BY BD

CHK'D BY

ITEM: TOP VIEW
CHAIR LEFT, RIGHT MECH.

~~UNTOLERANCED DIM.~~
~~FRACTL. DECIMAL~~
~~.XX ± .010~~
~~.XXX ± .005~~

MAT'L:

DRAWING NUMBER
19

STOCK	MAT'L.

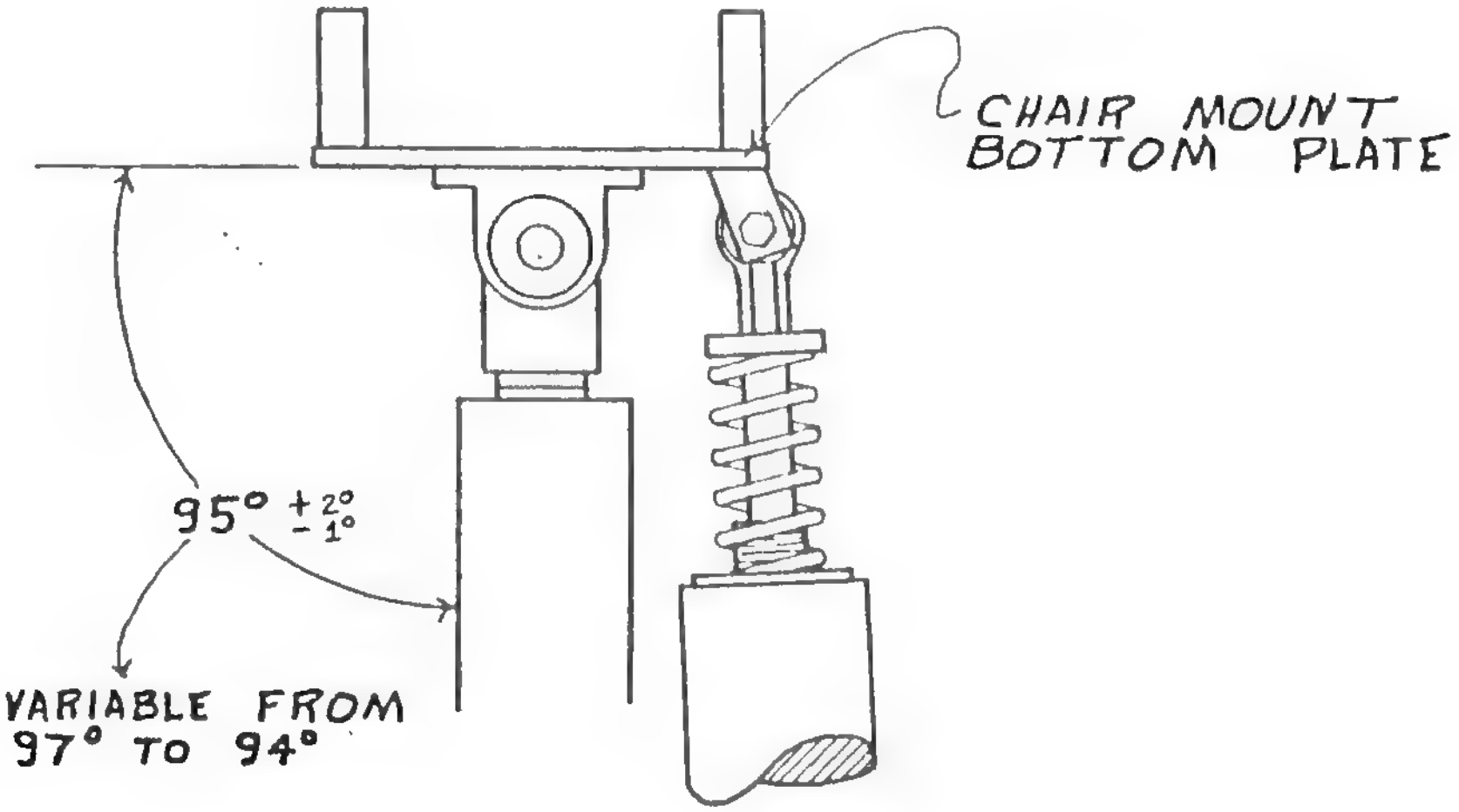

All tol. are Non-accumulative

R.I.D. APPROVAL DATE 7/7/83

PRODUCTION APP. DATE

Q.C. APPROVAL DATE

DEBURR AND BREAK ALL SHARP CORNERS .010

CREATIVE ENGINEERING INC

Property of Creative Engineering, Inc. Reproduction W/O Authorization is strictly prohibited.

SCALE:

DATE: 6·28·83

DRAWN BY ED

CHK'D. BY

~~UNTOLERANCED DIM.~~
~~FRACT'L. DECIMAL~~
~~± .010~~
~~± .030 ± .005~~

REVISIONS

REV.	DATE	BY

ITEM: SIDE VIEW
CHAIR LEAN MECHANISM

MAT'L:

DRAWING NUMBER 20A

STOCK	MAT'L.

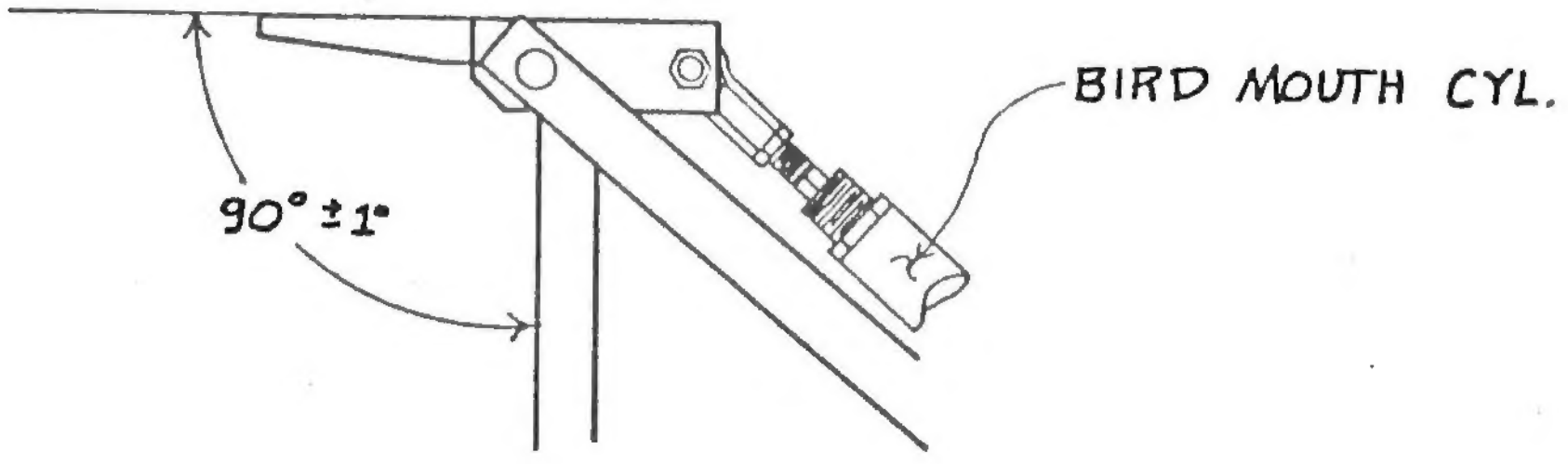

All tol. are Non-accumulative	R. & D. APPROVAL DATE 7/83	CREATIVE ENGINEERING INC	Property of Creative Engineering, Inc. Reproduction W/O Authorization is strictly prohibited
REVISIONS	PRODUCTION APP. DATE		
REV. / DATE / BY	Q. C. APPROVAL DATE	DEBURR AND BREAK ALL SHARP CORNERS .010	SCALE: / DATE: 6·27·83 / DRAWN BY BD / CHK'D. BY
	ITEM: SIDE VIEW BIRD MOUTH MECH.		~~UNTOLERANCED DIM.~~ ~~FRACT'L. DECIMAL~~ .XX ± .010 .XXX ± .005 ± .030
	MAT'L:		DRAWING NUMBER 21 A

STOCK	MAT'L.

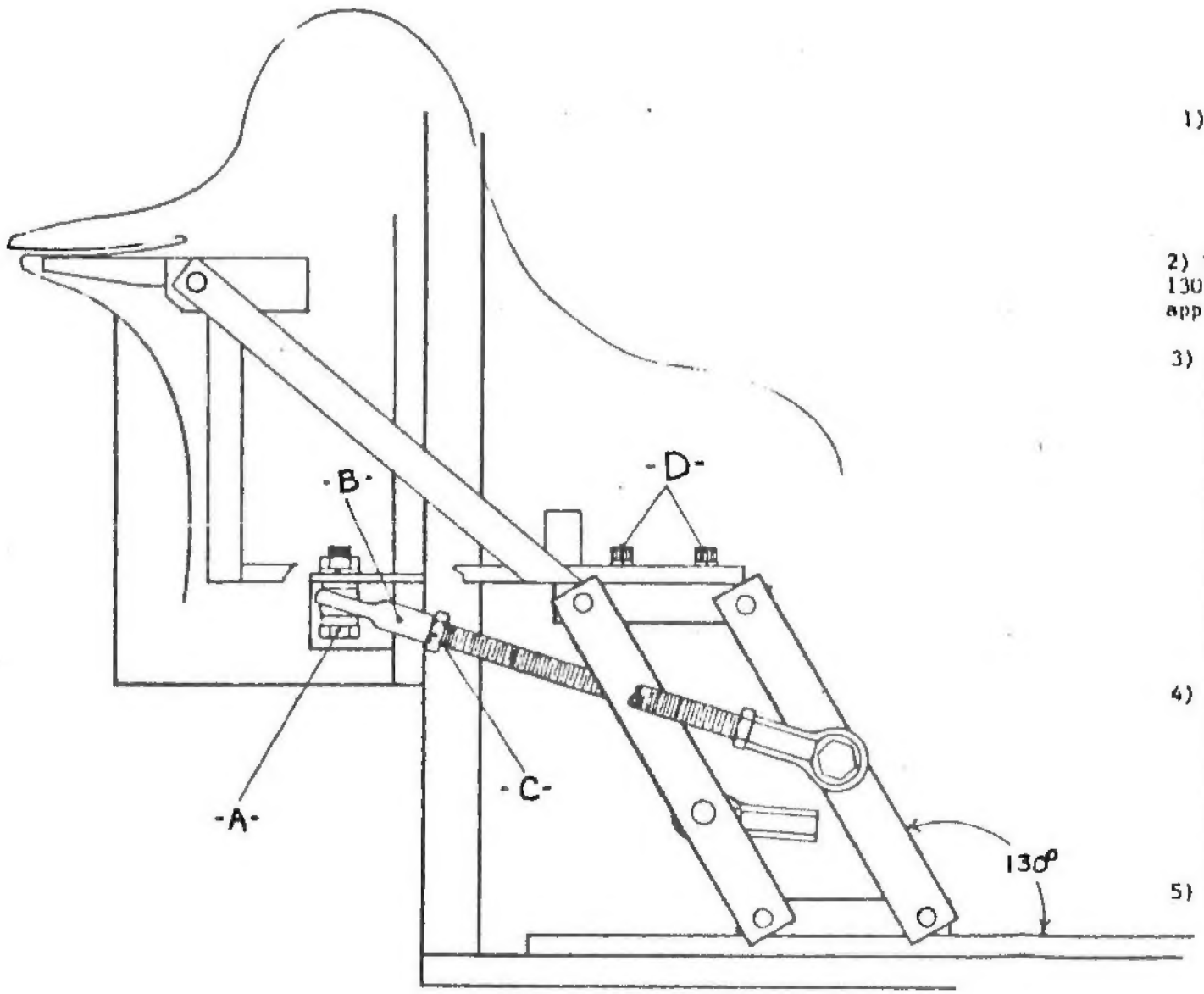

1) Working at the Klunk valve bank, manualy actuate the bird forward, valve #29. While holding the manual override button down, pull the .125 hose from the B or bottom port and let up the button. This releases the bird forward movement from air pressure.

2) With the Bird Foward Cylinder in the open position, adjust the angle to 130 degrees as indicated in the drawing. The Pin to Pin on the cylinder is approximatly 9 1/4".

3) To adjust the doors, remove the bolts -A- that attach the Rod Ends -B- to the doors. Working with one door at a time, loosen the clevis nut -C- and adjust the Rod End -B- in or out so that the door closes completly. DO NOT allow the door to close far enough to spring the hinge. Then tighten the clevis nut -C- back against the Rod End -B-. Detatch the Rod End you were working on from the door, and adjust the other door in the same fashion as the first. When your adjustments are completed the doors should be closed and equal to each other when in the static position. DO NOT pull the doors open from the front of the clock, you could break the doors, push the doors open using the cylinder. This adjustment should only be made when absolutely necessary.

4) With the doors closed, the nose of the bird is approximately 1/4" behind the doors, adjust using the 2 screws -D-. Hold a thin 6" scale against the nose of the bird, close the doors. Measure the distance from the nose to the front of the door, subtract the width of the doors (The doors are 1/2" thick), your measurement should be 3/4". (3/4"-1/2" doors = 1/4", the nose is 1/4" behind the doors) With the mouth cylinder fully closed,the beak is closed.

5) Reattach the .125 line at the valve bank, and test the mechanism.

All tol. are Non-accumulative	R. I. D APPROVAL DATE 7-1-83	CREATIVE ENGINEERING, INC.
	PRODUCTION APP. DATE	
REVISIONS: REV / DATE / BY	Q. C. APPROVAL DATE	DEBURR AND BREAK ALL SHARP CORNERS .010
		SCALE
		DATE 7-28-83
		DRAWN BY BD
		CHK'D BY
ITEM SIDE VIEW COO COO BIRD		UNTOLERANCED DIM. FRACTL. DECIMAL .xx ±.010 .xxx ±.005
MAT'L		DRAWING NUMBER 22A

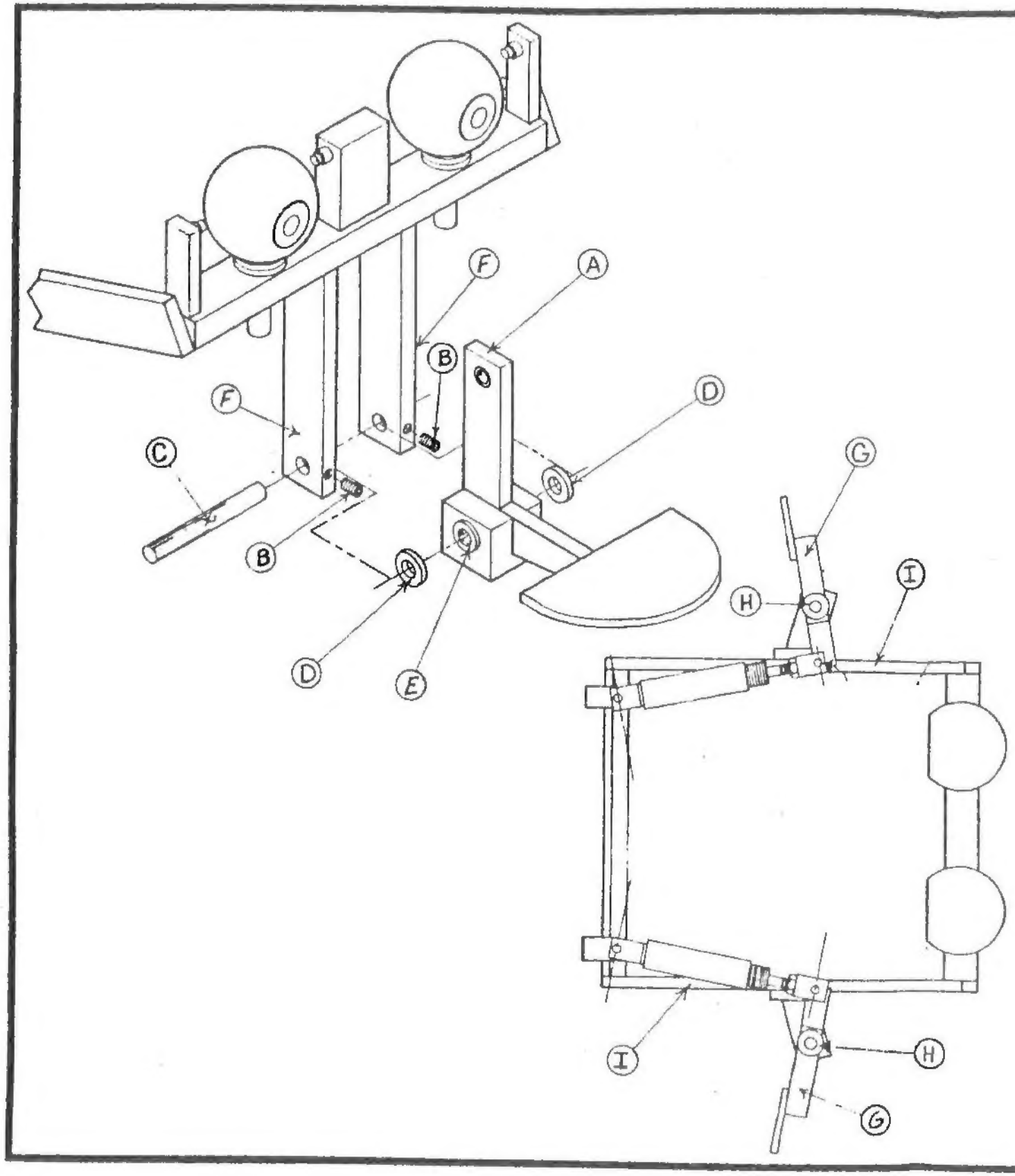

STOCK	MATL.

Step 1) Removal of the Klunk Mouth Lever: Pull or tap out the Fas-Pin attaching the mouth cylinder front mount, to the mouth lever (A).

Step 2) Loosen the two set screws (B), holding the Mouth Pivot Pin (C) into place. Tap out the Mouth Pivot Pin (C), using a Drift Punch and a Hammer. Remove Klunk's mouth lever and place it to the side. Save the 2 Bronze Washers (D), for the assembly of Santa's Mouth Lever.

Step 3) Attaching Santa's Mouth Lever: Check over the Pivot Pin (C) for burrs, and file down any found. See if the pin (C) will slide easily through the new mouth lever bushings (E). Grease the bushings (E) using black C.E.I. lube.

Step 4) Place Santa's mouth lever with the two Bronze Washers (D), previously removed in step 3, between the mouth downs (F) and slide the Pivot Pin (C) into place. Tighten down the two set screws (B). Check the Mouth for a smooth and easy movement.

Step 5) Re-attach the mouth cylinder to the mouth lever, using the Fas-Pin removed in step 1. Test the movement, using the manual override button on the valve bank. (Valve #1)

Step 6) Removing Klunk's ear plates: Pull out the cotter pins, attaching the two ear cylinders to the ear plate (G). Loosen the set screws in the two shaft collars (H), and remove them. Pull off the ear plates (G) and the load washers. Place a cable tie around the cylinders and the heads side plates (I). Only pull the cable ties tight enough to keep the cylinder from moving, while the character is moving.

Step 7) Store Klunk's mouth lever, ear plates and all left over hard ware, with the other Klunk apparatus.

CREATIVE ENGINEERING INC

Property of Creative Engineering, Inc. Reproduction W/O Authorization is strictly prohibited.

REVISIONS		
REV.	DATE	BY

SCALE:

DATE: 11 2 83

APPROVED BY DATE

DEBURR AND BREAK ALL SHARP CORNERS .010

DRAWN BY BD

CHK'D BY

ITEM: KLUNK TO SANTA RETRO-FIT

DESCRIPTION:

TOLERANCES
FRACT'L. 020
DECIMAL .xx ± .010 .xxx ± .005

DRAWING NUMBER 23A

UNCLE KLUNK INSTALLATION MANUAL

(WITH SUPPLEMENTAL SANTA INSTALL MEMOS)

Date of Origin: 1983
Archived: 11-5-23
Submission by pikalove
Version 1.0

The documents contained herein are for educational use only. Please do not replicate, redistribute, or make any unauthorized printings. All intellectual property including characters, artwork, photography, and slogans are trademark and/or copyright their respective owners.